ARISTON

Installation and Servicing Instructions

GENUS HE

Downloaded From www.Gas101.Co.Uk

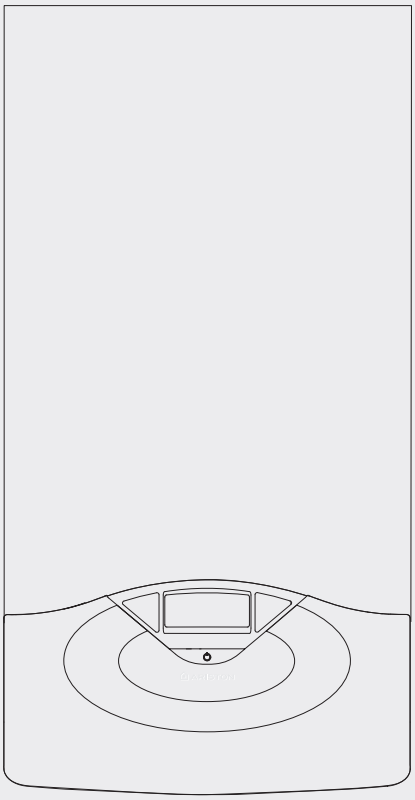

Gas fired condensing wall hung combination boilers

G.C.N : 47-116-54 (24 kW)
G.C.N : 47-116-55 (30 kW)
G.C.N : 47-116-56 (38 kW)

GENUS HE 24
GENUS HE 30
GENUS HE 38

kiwa approved product
UK WATER SUPPLY REGULATIONS

benchmark COLLECTIVE MARK
THE MARK OF QUALITY FOR THE INSTALLATION, COMMISSIONING AND SERVICING OF DOMESTIC HEATING AND HOT WATER SYSTEMS

Country of destination GB, IE

INDEX

Overview
General Information....3
Advice for the Installer....4
CE Labelling....4
Data Plate Symbols....4
Safety Regulations....5

Product description
Control Panel....6
Display....6
Overall View....7
Overall Dimension....7
Minimum Clearances....7
Technical Information....8

Installation
Reference Standards....9
Installing the Boiler....12
Gas Connection....13
Water Connection....13
Instructions for Opening the Casing and Performing an Internal Inspection....13
Underfloor heating....14
Water circuit diagram....14
Connecting the Flue....15
Fitting the Coaxial Flue (Ø 60/100 Horizontal)....16
Fitting the 5" Flue (Ø 80/125 Horizontal / Vertical)....17
Fitting the Coaxial Flue (Ø 60/100 Vertical)....18
Fitting the Twin Pipe (Ø 80/80)....19
Electrical Connections....23
Power supply cable....23
Peripheral unit connection....23
Room Thermostat Connection....24
Outdoor Sensor Connection....24
Electrical Diagram....25

Commissioning
Initial Preparation....26
Electricity Supply....26
Filling the Heating System....26
Filling of the DHW System....26
Gas Supply....26
Water Treatment....26
First Igniton Operation....27
Basic Set Up Instructions - Timer and Range Rating Power....30
Test Function and Combustion Analysis....32
AUTO Function....33

Boiler Protection Devices
Boiler Protection Devices....34
Anti-Frost Device....34
Table summarising error codes....34

Settings - Adjustment - Problem Identification Menus
Accessing the Menus....35
INFO....43

Maintenance
General Comments....44
General Access....45
Electrical Unit....46
Hydraulic Unit....48
Main Heat Exchanger....56
Burner Unit....57
Fan Unit....60
Gas Valve....61
Annual Maintenance....62
Spare Parts Short List....64
Benchmark Commissioning Checklist....65
Benchmark Service Interval Record....66

Downloaded From www.Gas101.Co.Uk

These instructions are suitable for GENUS HE boilers :
Do not forget the Log Book!

The Benchmark Scheme
Benchmark places responsibilities on both manufacturers and installers. The purpose is to ensure that customers are provided with the correct equipment for their needs, that it is installed, commissioned and serviced in accordance with the manufacturer's instructions by competent persons and that it meets the requirements of the appropriate Building Regulations. The Benchmark Checklist can be used to demonstrate compliance with Building Regulations and should be provided to the customer for future reference.

Installers are required to carry out installation, commissioning and servicing work in accordance with the Benchmark Code of Practice which is available from the Heating and Hotwater Industry Council who manage and promote the Scheme. Visit www.centralheating.co.uk for more information.

To The Installer
As part of the commissioning of this appliance it is vital that the Log Book is completed and given to the Householder. Please ensure that your customer is aware of the importance of keeping the Log Book safe as a record of the installation and the appliance service history.

Please ensure that your customer is aware of the correct operation of the system, boiler and controls.

MTS recommend the use of protective clothing, when installing and working on the appliance i.e. gloves.

CUSTOMER CARE
MTS, as a leading manufacturer of domestic and commercial water heating appliances is committed to providing high quality products and a high quality after sales service.
Advice on installation or servicing can also be obtained by contacting the MTS Technical and Customer Service Departments at High Wycombe.

TECHNICAL DEPARTMENT		CUSTOMER SERVICE DEPARTMENT	
Tel:	0870 241 8180	Tel:	0870 600 9888
Fax:	01494 459775	Fax:	01494 459775

GUARANTEE
The manufacturer's guarantee is for 2 years from the date of purchase. The guarantee is invalidated if the appliance is not installed in accordance with the recommendations made herein or in a manner not approved by the manufacturer. To assist us in providing you with an efficient after sales service, please return the guarantee registration card enclosed with the boiler without delay.

CAUTION
In the United Kingdom, installation, start-up, adjustments and maintenance, must be performed by a competent person only, in accordance with the current Gas Safety (Installation & Use) Regulations and the instructions provided.

In the Republic of Ireland, the installation and initial start up of the appliance must be carried out by a Competent Person in accordance with the current edition of I.S.813 "Domestic Gas Installations", the current Buidling Regulations, reference should also be made to the current ETCI rules for electrical installation.

All CORGI registered installers carry a CORGI ID card, and have a registration number. Both should be recorded in your boiler Log Book. You can check your installer is CORGI registered by calling CORGI directly on:- 0800 915 0485.

Improper installation may cause damage or injury to individuals, animals and personal property for which the manufacturer will not be held liable. To ensure efficient and safe operation it is recommended that the boiler is serviced annually by a competent person.

If it is known that a fault exists on the appliance, it must not be used until the fault has been corrected by a competent person.

This instruction booklet is especially designed for appliances installed in the UK and the Republic of Ireland

Downloaded From www.Gas101.Co.Uk

Advice for the installer
The installation and first ignition of the boiler must be performed by qualified personnel in compliance with current national regulations regarding installation, and in conformity with any requirements established by local authorities and public health organisations.
After the boiler has been installed, the installer must ensure that the end user receives the declaration of conformity and the operating manual, and should provide all necessary information as to how the boiler and the safety devices should be handled.

This appliance is designed to produce hot water for domestic use.
It should be connected to a heating system and a distribution network for domestic hot water, both of which must be compatible with its performance and power levels.
The use of the appliance for purposes other than those specified is strictly forbidden. The manufacturer cannot be held responsible for any damage caused by improper, incorrect and unreasonable use of the appliance or by the failure to comply with the instructions given in this manual.
Installation, maintenance and all other interventions must be carried out in full conformity with the governing legal regulations and the instructions provided by the manufacturer. Incorrect installation can harm persons, animals and possessions; the manufacturing company shall not be held responsible for any damage caused as a result. The boiler is delivered in a carton. Once you have removed all the packaging, make sure the appliance is intact and that no parts are missing. If this is not the case, please contact your supplier.
Keep all packaging material (clips, plastic bags, polystyrene foam, etc.) out of reach of children as it may present a potential hazard.
In the event of a fault and/or malfunction, turn the appliance off, turn off the gas cock and do not attempt to repair it yourself. Contact a qualified professional instead.
Before any maintenance or repair work is performed on the boiler, make sure you have disconnected it from the electricity supply by switching the external bipolar switch to the "OFF" position and removing the fuse.
All repairs, which should only be performed using original spare parts, should be carried out by a qualified professional. Failure to comply with the above instructions could compromise the safety of the appliance and invalidate all liability on the part of the manufacturer.
In the event of any maintenance or other structural work in the immediate vicinity of the ducts or flue gas exhaust devices and their accessories, switch the appliance off by switching the external bipolar switch to the "OFF" position and shutting off the gas control valve. When the work has been completed, ask a qualified technician to check the efficiency of the ducting and the devices.
Turn the boiler off and turn the external switch "OFF" to clean the exterior parts of the appliance.
Clean using a cloth dampened with soapy water. Do not use aggressive detergents, insecticides or toxic products. If the appliance is used in full compliance with current legislation, it will operate in a safe, environmentally-friendly and cost-efficient manner.
If using kits or optional extras, make sure they are authentic.

CE labelling
The CE mark guarantees that the appliance conforms to the following directives:
- **90/396/CEE**
  relating to gas appliances
- **2004/108/CEE**
  relating to electromagnetic compatibility
- **92/42/CEE**
  relating to energy efficiency
- **2006/95/CEE**
  relating to electrical safety

Symbols used on the data plate

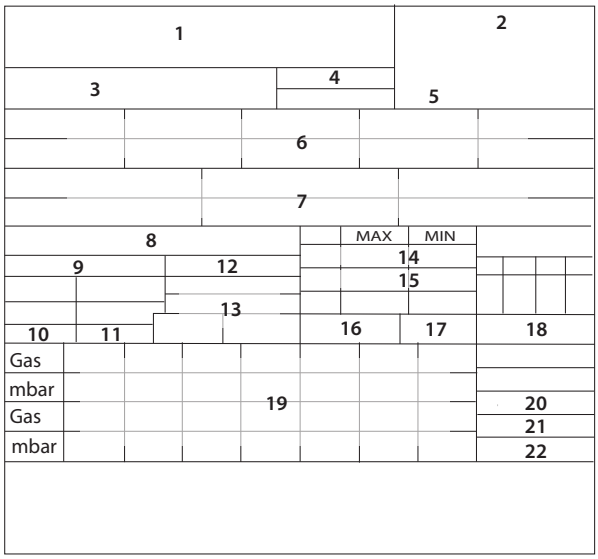

Legend :
1. Brand
2. Manufacturer
3. Boiler model - Serial number
4. Commercial reference
5. certification number
6. Destination country - gas category
7. Gas setting
8. Installation type
9. Electrical data
10. Maximum domestic hot water pressure
11. Maximum heating pressure
12. Boiler type
13. NOx class / Efficiency
14. Input rating nominal heating
15. Power ouput heating
16. DHW specific flow rate
17. Boiler output efficiency
18. Input rating nominal DHW
19. Gases which may be used
20. Temperature ambiante de fonctionnement
21. Max. central heating temperature
22. Max. domestic hot water temperature

Downloaded From www.Gas101.Co.Uk

Safety regulations

Key to symbols:

⚠ Failure to comply with this warning implies the risk of personal injury, in some circumstances even fatal

△ Failure to comply with this warning implies the risk of damage, in some circumstances even serious, to property, plants or animals.

Install the appliance on a solid wall which is not subject to vibration.

⚠ Noisiness during operation.

When drilling holes in the wall for installation purposes, take care not to damage any electrical wiring or existing piping.

⚠△ Electrocution caused by contact with live wires. Explosions, fires or asphyxiation caused by gas leaking from damaged piping. Damage to existing installations. Flooding caused by water leaking from damaged piping.

Perform all electrical connections using wires which have a suitable section.

△ Fire caused by overheating due to electrical current passing through undersized cables.

Protect all connection pipes and wires in order to prevent them from being damaged.

⚠△ Electrocution caused by contact with live wires. Explosions, fires or asphyxiation caused by gas leaking from damaged piping. Flooding caused by water leaking from damaged piping.

Make sure the installation site and any systems to which the appliance must be connected comply with the applicable norms in force.

⚠△ Electrocution caused by contact with live wires which have been installed incorrectly. Damage to the appliance caused by improper operating conditions.

Use suitable manual tools and equipment (make sure in particular that the tool is not worn out and that its handle is fixed properly); use them correctly and make sure they do not fall from a height. Replace them once you have finished using them.

⚠△ Personal injury from the falling splinters or fragments, inhalation of dust, shocks, cuts, pricks and abrasions. Damage to the appliance or surrounding objects caused by falling splinters, knocks and incisions.

Use electrical equipment suitable for its intended use (in particular, make sure that the power supply cable and plug are intact and that the parts featuring rotary or reciprocating motions are fastened correctly); use this equipment correctly; do not obstruct passageways with the power supply cable, make sure no equipment could fall from a height. Disconnect it and replace it safely after use.

⚠△ Personal injury caused by falling splinters or fragments, inhalation of dust, knocks, cuts, puncture wounds, abrasions, noise and vibration. Damage to the appliance or surrounding objects caused by falling splinters, knocks and incisions.

Make sure any portable ladders are positioned securely, that they are suitably strong and that the steps are intact and not slippery and do not wobble when someone climbs them. Ensure someone provides supervision at all times.

⚠ Personal injury caused by falling from a height or cuts (stepladders shutting accidentally).

Make sure any rolling ladders are positioned securely, that they are suitably strong, that the steps are intact and not slippery and that the ladders are fitted with handrails on either side of the ladder and parapets on the landing.

⚠ Personal injury caused by falling from a height.

During all work carried out at a certain height (generally with a difference in height of more than two metres), make sure that parapets are used to surround the work area or that individual harnesses are used to prevent falls. The space where any accidental fall may occur should be free from dangerous obstacles, and any impact upon falling should be cushioned by semi-rigid or deformable surfaces.

⚠ Personal injury caused by falling from a height.

Make sure the workplace has suitable hygiene and sanitary conditions in terms of lighting, ventilation and solidity of the structures.

⚠ Personal injury caused by knocks, stumbling etc.

Protect the appliance and all areas in the vicinity of the work place using suitable material.

△ Damage to the appliance or surrounding objects caused by falling splinters, knocks and incisions.

Handle the appliance with suitable protection and with care.

△ Damage to the appliance or surrounding objects from shocks, knocks, incisions and squashing.

During all work procedures, wear individual protective clothing and equipment.

⚠ Personal injury caused by electrocution, falling splinters or fragments, inhalation of dust, shocks, cuts, puncture wounds, abrasions, noise and vibration.

Place all debris and equipment in such a way as to make movement easy and safe, avoiding the formation of any piles which could yield or collapse.

△ Damage to the appliance or surrounding objects from shocks, knocks, incisions and squashing.

All operations inside the appliance must be performed with the necessary caution in order to avoid abrupt contact with sharp parts.

⚠ Personal injury caused by cuts, puncture wounds and abrasions.

Reset all the safety and control functions affected by any work performed on the appliance and make sure they operate correctly before restarting the appliance.

⚠△ Explosions, fires or asphyxiation caused by gas leaks or an incorrect flue gas exhaust. Damage or shutdown of the appliance caused by out-of-control operation.

Before handling, empty all components that may contain hot water, carrying out any bleeding if necessary.

⚠ Personal injury caused by burns.

Descale the components, in accordance with the instructions provided on the safety data sheet of the product used, airing the room, wearing protective clothing, avoid mixing different products, and protect the appliance and surrounding objects.

⚠△ Personal injury caused by acidic substances coming into contact with skin or eyes; inhaling or swallowing harmful chemical agents. Damage to the appliance or surrounding objects due to corrosion caused by acidic substances.

If you detect a smell of burning or smoke, keep clear of the appliance, disconnect it from the electricity supply, open all windows and contact the technician.

⚠ Personal injury caused by burns, smoke inhalation, asphyxiation.

Downloaded From www.Gas101.Co.Uk

Control panel

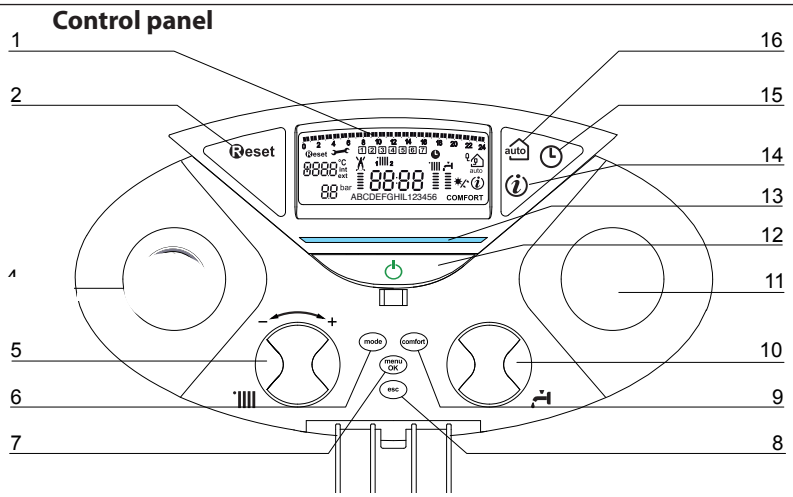

Legend :

1. Display
2. Reset button
5. Heating temperature regulation knob/ "encoder" programming knob
6. Mode button (Operation mode selection (summer/winter)
7. Menu/Ok button (Programming key)
8. Esc button
9. Comfort button
10. Domestic Hot Water adjustment knob
11. Time clock (optional)
12. ON/OFF button
13. Led burner ON
14. Info button
15. Clock button
16. Auto button (To activate Thermoregulation)

Display

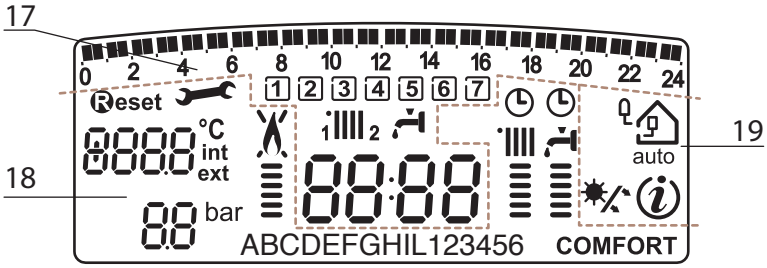

17 . Weekly programming	
0 2 4 6 8 10 12 14 16 18 20 22 24	Schedule programming
1 2 3 4 5 6 7	Day of the week (Mon.....Sun)
1 2	Zone indication relating to the display/setting process of the Heating schedule programming (zone 1 and zone 2)
88:88	Date and time
	Heating schedule programming activated
18 . Operation and diagnostics	
8888 °C int ext	Digits indicating: boiler status and temperature indication menu settings error code signals Internal temperature displayed (with bus device optional) External temperature displayed (with external sensor optional)
Reset	Reset button request
	Technical assistance request
88	Digital pressure gauge
	Flame detected with Power used indication or operation shutdown indication
	Heating operation and indication of the set temperature level
	Hot water operation and indication of the set temperature level
ABCDE...	Scrolling text displaying operation information
COMFORT	Hot Water Comfort activated
19 . Room control and management of peripherals	
	AUTO function activated (Temperature regulation activated) with indication of any internal (BUS) or external sensors connected. See page 33 for AUTO function details
	Display Info menu
	Clip-in solar connected (optional) Constant = solar clip-in connected Flashing = use of solar energy activated

Downloaded From www.Gas101.Co.Uk

Overall view

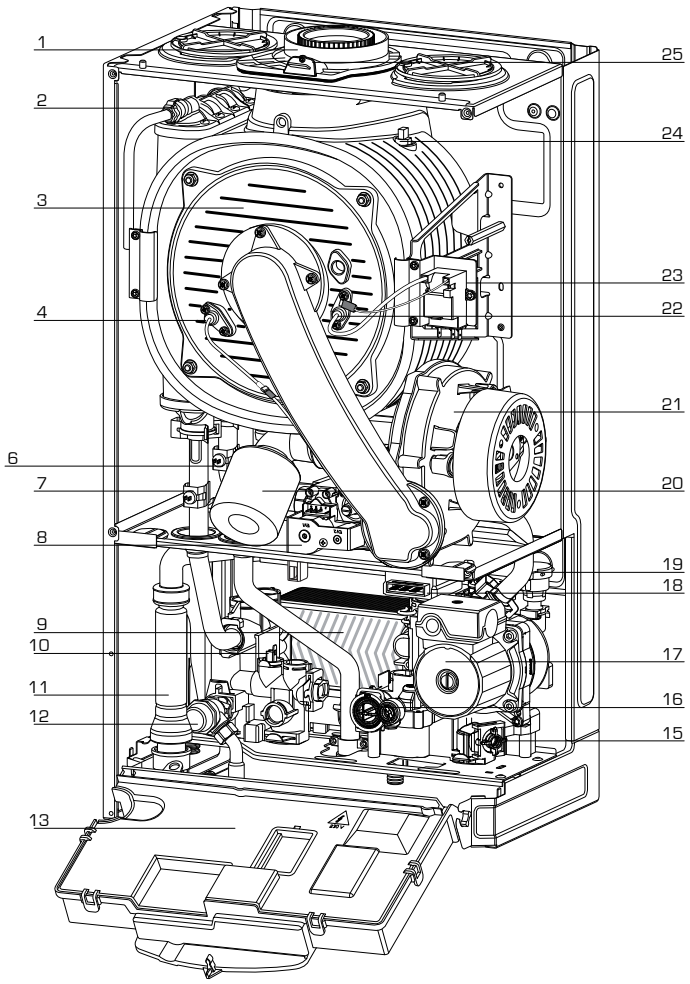

1. Flue connector
2. Manual air vent
3. Burner
4. Detection electrode
6. C.H. return temperature probe
7. C.H. Flow temperature probe
8. Gas valve
9. Secondary heat exchanger
10. D.H.W. temperature probe
11. Condensate trap
12. C.H. pressure relief valve
13. Electrical box
15. C.H. circuit filter
16. D.H.W. flow switch
17. Circulation pump with air release valve
18. Diverter valve
19. Water pressure sensor
20. Silencer
21. Modulating fan
22. Ignition electrodes
23. Ignitor
24. Thermal fuse
25. Combustion analysis test point

Overall Dimensions

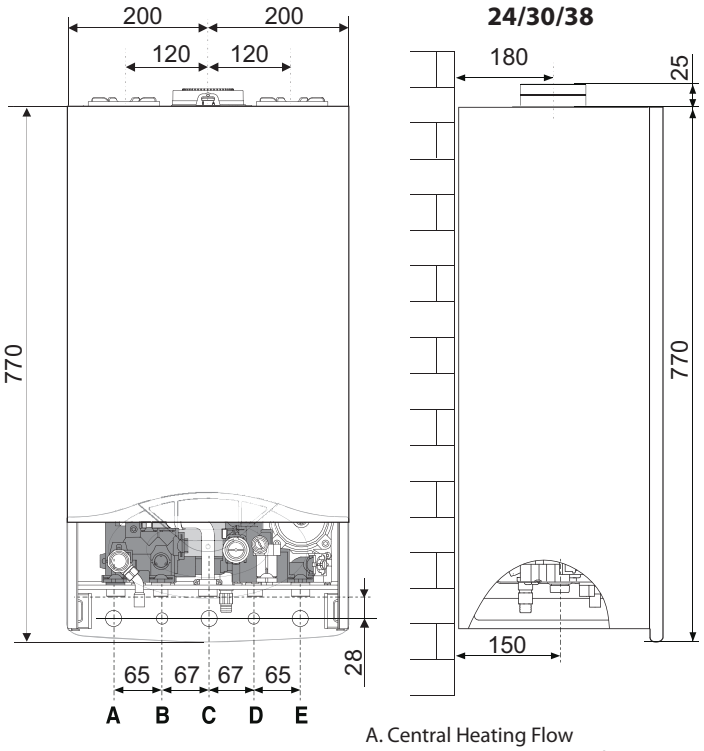

A. Central Heating Flow
B. Domestic Hot Water Outlet
C. Gas Inlet
D. Domestic Cold Water Inlet
E. Central Heating Return

Minimum clearances

In order to allow easy access to the boiler for maintenance operations, The boiler must be installed in accordance with the clearances stated below.

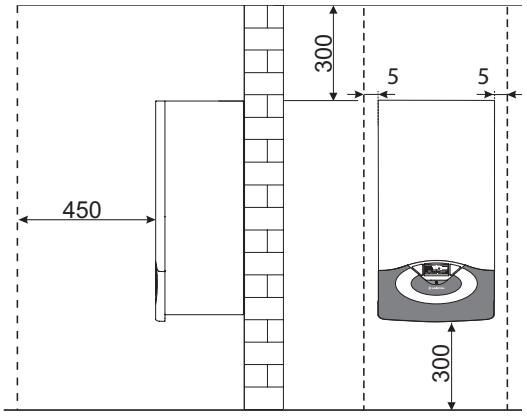

Downloaded From www.Gas101.Co.Uk

Technical Data

	Model GENUS HE			24	30	38
GENERAL	CE Certification (pin)			0085BR0347		
	Boiler type			B23-C13-C33-C43-C53-C83		
POWER SPECIFICATIONS	Max/min nominal calorific flow rate (Pci)	Qn	kW	22.0/5.5	28.0/6.5	31.0/7.5
	Max/min nominal calorific flow rate (Pcs)	Qn	kW	24.4/6.1	31.1/7.2	34.4/8.3
	Domestic hot water max/min nominal calorific flow rate (Pci)	Qn	kW	25.0/5.5	30.0/6.5	38.0/7.5
	Domestic hot water max/min nominal calorific flow rate (Pcs)	Qn	kW	27.8/6.1	33.3/7.2	42.2/8.3
	Max/min power output (80°C-60°C) (Central Heating)	Pn	kW	21.6/5.2	27.4/6.2	30.3/7.3
	Max/min power output (50°C-30°C) (Central Heating)	Pn	kW	23.5/6.0	30.0/6.9	33.1/8.0
	Domestic hot water max/min power output	Pn	kW	25.0/5.0	30.0/6.0	38.9/7.1
	Combustion efficiency (of flue gas)		%	97.9	97.9	98.0
	Nominal calorific flow rate efficiency (60/80°C) Hi/Hs		%	98.0/88.2	98.0/88.2	97.6/87.9
	Nominal calorific flow rate efficiency (30/50°C) (condensation) Hi/Hs		%	107.0/96.4	107.0/96.4	106.7/96.1
	Efficiency at 30% at 30°C (condensation) Hi/Hs		%	108.0/97.3	108.0/97.3	109.1/98.2
	Efficiency at 30% at 47°C Hi/Hs		%	101.0/90.9	98.2/88.4	103.1/92.8
	Minimum calorific flow rate efficiency (60/80°C) Hi/Hs		%	95.0/85.5	95.6/86.1	96.8/87.2
	Efficiency rating (dir. 92/42/EEC)		stars	****	****	****
	Sedbuk Rating		Band / %	A / 90.3	A / 90.3	A / 90.1
	Loss when stopped (ΔT = 50°C)		%	0,2	0,1	0,1
	Loss of burner gas when operating		%	2,1	2,1	2,0
EMISSIONS	Available air pressure		Pa	137	141	132
	NoX class (Less than 70 mg/kWh)		class	5	5	5
	Flue gas temperature (G20) (80°C-60°C)		°C	63	63	62
	CO2 content (G20) (80°C-60°C)		%	9.0	9.0	9.4
	CO content (0%O2) (80°C-60°C)		ppm	< 100	< 100	< 125
	O2 content (G20) (80°C-60°C)		%	4.5	4.5	3.5
	Maximum flue gas flow (G20) (80°C-60°C)		Kg/h	41.2	49.4	59.2
	Excess air (80°C-60°C)		%	27	27	20
HEATING CIRCUIT	Expansion chamber inflation pressure		bar	1	1	1
	Maximum heating pressure		bar	3	3	3
	Expansion chamber capacity		L	6,5	6,5	6,5
	Maximum water capacity within the appliance (75°C-35°C)		L	100/300	100/300	100/300
	Min/max heating temperature (high temperature range)		°C	35/82	35/82	35/82
	Min/max heating temperature (low temperature range)		°C	20/45	20/45	20/45
DOMESTIC HOT WATER	Domestic hot water min/max temperature		°C	36/60	36/60	36/60
	Specific flow rate of domestic hot water (ΔT=30°C)		l/min	12.0	15.0	18.2
	Quantity of hot water ΔT=25°C		l/min	14.4	18.0	21.8
	Quantity of hot water ΔT=35°C		l/min	10.3	12.9	15.6
	Hot water comfort rating (EN13203)		stars	***	***	***
	Hot water minimum flow rate		l/mn	< 2	< 2	< 2
	Domestic hot water max/min pressure		bar	6/0.3	6/0.3	6/0.3
ELECTRICAL	Power supply frequency/voltage		V/Hz	230/50	230/50	230/50
	Total electrical power absorbed		W	114	115	150
	Minimum ambient temperature for use		°C	+5	+5	+5
	Protection level for the electrical appliance		PI	X5D	X5D	X5D
	Weight		kg	32	35	35.5
	Dimension (W x H x D)		mm	440/820/385	440/820/455	440/820/455

Downloaded From www.Gas101.Co.Uk

Reference Standards
In the United Kingdom, the installation and initial start-up of the boiler must be by a CORGI registered installer in accordance with the installation standards currently in effect, as well as with any and all local health and safety standards i.e. CORGI.

In the Republic of Ireland the installation and initial start-up of the appliance must be carried out by a Competent Person in accordance with the current edition of I.S.813 "Domestic Gas Installations" and the current Building Regulations, reference should also be made to the current ETCI rules for electrical installation.

The installation of this appliance must be in accordance with the relevant requirements of the Local Building Regulations, the current I.E.E. Wiring Regulations, the by-laws of the local authority, in Scotland, in accordance with the Building Standards (Scotland) Regulation and Health and Safety document No. 635, "Electricity at Work Regulations 1989" and in the Republic of Ireland with the current edition of I.S. 813 and the Local Building Regulations (IE).

C.O.S.H.H.
Materials used in the manufacture of this appliance are non-hazardous and no special precautions are required when servicing.

Codes of Practive
Installation should also comply with the following British Standards Code of Practice:

BS 7593:1992	**Treatment of water in domestic hot water central heating systems**
BS 5546:1990	**Installation of hot water supplies for domestic purposes**
BS 5440-1:2000	**Flues**
BS 5440-2:2000	**Air supply**
BS 5449:1990	**Forced circulation hot water systems**
BS 6798:2000	**Installation of gas fired hot water boilers of rated input not exceeding 70kW**
BS 6891:1989	**Installation of low pressure gas pipes up to 28mm**
BS 7671:2001	**IEE Wiring Regulations**
BS 4814:1990	**Specification for expansion vessels**
BS 5482:1994	**Installation of L.P.G.**

and in the Republic of Ireland in accordancce with the following codes of practice:

I.S. 813	**Domestic Gas Installations**

Avoid installing the boiler where the air inlet can be polluted by chemical products such as chlorine (swimming pool area), or ammonia (hair dresser), or alkalin products (launderette).

Flue
Detailed information on flue assembly can be found in the "**Connecting the Flue"** section.
The boiler must be installed so that the flue terminal is exposed to the free passage of external air at all times and must not be installed in a place likely to cause nuisance. It must not be allowed to discharge into another room or space such as an outhouse or closed lean-to.

Condensing boilers have a tendency to form a plume of water vapour from the flue terminal due to the low temperature of the flue gasses. The terminal should therefore be located with due regard for the damage or discolouration that may occur to building within the vicinity and consideration must also be given to adjacent boundaries, openable windows should also be taken into consideration when siting the flue.

The minimum acceptable clearances are shown below:

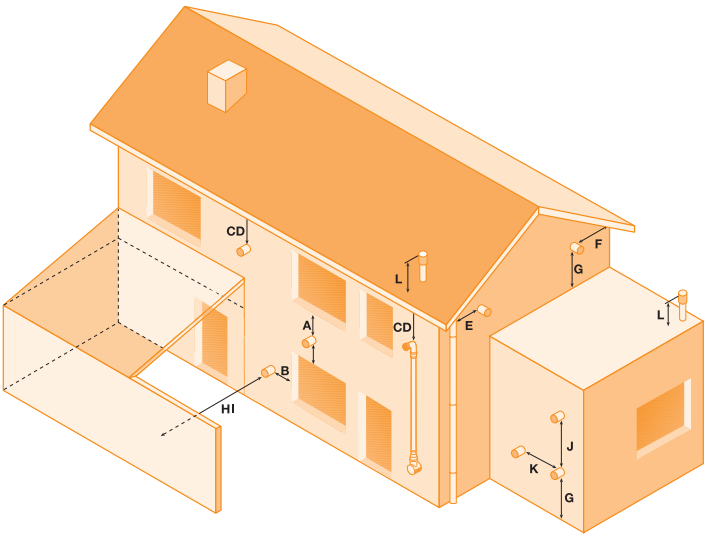

- A Directly below an opening, window, etc	300 mm
- B Horizontally to an opening, window, etc	300 mm
- C Below gutters, soils pipes or drain pipes	75 mm
- D Below eaves	200 mm
- E From vertical drain pipe or soil pipe	75 mm
- F From internal or external corner	300 mm
- G Above ground, roof or balcony level	300 mm
- H From a surface facing the terminal	2500 mm
- I From a terminal facing a terminal	2500 mm
- J Vertically from a terminal on the same wall	1500 mm
- K Horizontally from an terminal on the same wall	300 mm
- L Fixed by vertical flue terminal	

NOTE: THE FLUE MUST NOT BE INSTALLED IN A PLACE LIKELY TO CAUSE A NUISANCE AND POSITIONED TO ENSURE THAT PRODUCTS OF COMBUSTION DO NOT DISCHARGE ACROSS A BOUNDARY

It may be necessary to protect the terminal with a guard, if this is the case it will be necessary to purchase a stainless steel terminal guard. Reference should be made to the Building Regulations for guidance.

Ventilation
The room in which the boiler is installed does not require specific ventilation. If the boiler is installed in a cupboard or compartment ventilation is not required for cooling purposes.

Gas Supply
The gas installation and tightness testing must be in accordance with the requirements of BS6891. Ensure that the pipe size is adequate for demand including other gas appliances on the same supply.

Electrical Supply
The appliance requires an earthed 230V - 50 Hz supply and must be in accordance with current I.E.E. regulations. It must also be possible to be able to completely isolate the appliance electrically. Connection should be via a 3 amp double pole fused isolating switch with contact separation of at least 3mm on both poles. Alternatively, a fused 3 amp, 3 pin plug and unswitched socket may be used, provided it is not used in a room containing a bath or shower, it. It should only supply the appliance.

Downloaded From www.Gas101.Co.Uk

Water Supply
The boiler is suitable for sealed systems only. The maximum working pressure for the appliance is 6 bar. All fittings and pipework for the appliance should be of the same standard. If there is a possibility of the incoming mains pressure exceeding 6 bar, particularly at night, then a suitable pressure limiting valve must be fitted.
The boiler is designed to provide hot water on demand to multiple outlets within the property. If there is a requirement for greater demands, for example if the boiler has several bathrooms and cloakrooms, a vented or unvented hot water storage system may be used.

Showers
Any shower valves used with the appliance should be of a thermostatic or pressure balanced type. Refer to the shower manufacturer for performance guidance and suitability.

Flushing and Water Treatment
The boiler is equipped with a stainless steel heat exchanger.

The detailed recommendations for water treatment are given in BS 7593:1992 (Treatment of water in domestic hot water central heating systems); the following notes are given for general guidance.

If the boiler is installed on an existing system, any unsuitable additives must be removed.

Under no circumstances should the boiler be fired before the system has been thoroughly flushed; the flushing procedure must be in line with BS 7593:1992.

We highly recommend the use of a flushing detergent appropriate for the metals used in the circuit. These include cleansers produced by Fernox BetzDearbon, whose function is to disolve any foreign matter that may be in the system.

In hard water areas or where large quantities of water are in the system the treatment of water to prevent premature scaling of the main exchanger is necessary.

The formation of scale heat compromises the efficiency of the thermic exchanger because small areas of scale cause a high increase of the temperature of the metallic walls and therefore add to the thermal stress of the heat exchanger.

Demineralised water is more aggressive so in this situation it is necessary to treat the water with an appropriate corrosion inhibitor.

Any treatment of water by additives in the system for frost protection or for corrosion inhibition has to be absolutely suitable for all metals used in the circuit.

The use of a corrosion inhibitor in the sysem such as Fernox MB-1, BetzDearborn Sentinel X100 or Fernox System Inhibitor is recommended to prevent corrosion (sludge) damaging the boiler and system.

If anti-freeze substances are to be used in the system, check carefully that they are compatible with the metals used in the circuit.

MTS suggests the use of suitable anti-freeze products such as Fernox ALPHI 11, which will prevent rust and incrustation taking place.

Periodically check the pH balance of the water/anti-freeze mixture of the boiler circuit and replace it when the amount measured is out of the range stipulated by the manufacturer (7 < pH < 8).
DO NOT MIX DIFFERENT TYPES OF ANTI-FREEZE

In under-floor systems, the use of plastic pipes without protection against penetration of oxygen through the walls can cause corrosion of the systems metal parts (metal piping, boiler etc), through the formation of oxides and bacterial agents.

To prevent this problem it is necessary to use pipes with an "oxygen proof barrier", in accordance with standards DIN 4726/4729. **If pipes of this kind are not used, keep the system separate by installing heat exchangers of those with a specific system water treatment.**

IMPORTANT
Failure to carry out the water treatment procedure will invalidate the appliance guarantee.

System Controls
The boiler is electrically controlled and is suitable for most modern electronic time and temperature controls. The addition of such external controls can be beneficial to the efficient operation of the system. The boiler connections for external controls are 12V DC and so only controls of 12V DC that have voltage free contacts should be used. (page 24).
MTS supply a range of wired and wireless system controls. Contact your supplier for more details.

Location
The boiler can be installed on any suitable internal wall (suitable sound proofing may be required when installing onto a stud partition wall). Provision must be made to allow for the correct routing of the flue and siting of the terminal to allow the safe and efficient removal of the flue products. A compartment or cupboard may be used provided that it has been built or modified for this purpose. It is not necessary to provide permanent ventilation for cooling purposes. Detailed recommendations are given in BS 5440 Part 2. If it is proposed that it is to be installed in a timber framed building then reference should be made to British Gas Document DM2, IGE/UP/7 or advice sought from CORGI.

Where a room sealed appliance is installed in a room containing a bath or shower, the appliance and any electrical switch or appliance control, utilising mains electricity should be situated specifically in accordance with current IEE Wiring Regulations.

For unusual locations, special procedures may be necessary. **BS 6798:2000** gives detailed guidance on this aspect.

Codensate Discharge
The condensate discharge hose from the boiler must have a continuous fall of 2.5° and must be inserted by at least 50mm into a suitable acid resistant pipe - e.g. plastic waste or overflow pipe. The condensate discharge pipe must have a minimum diameter of 22mm, must have a continuous fall and preferably be installed and terminated to prevent freezing.
The discharge pipe must be terminated in a suitable position:

i) Connecting into an internal soil stack (at least 450mm above the invert of the stack). A trap giving a water seal of at least 75mm must be incorporated into the pipe run, there also must be an air beak upstream of the trap.

Downloaded From www.Gas101.Co.Uk

ii) Connecting into the waste system of the building such as a washing maching or sink trap. The connection must be upstream of the washing machine/sink. If the connection is downstream of if the waste trap then an additional trap giving a minimum water seal of 75mm and an air break must be incorporated in the pipe run, as above.

iii) Terminating into a gully, below the grid level but above the water level

iv) Into a soakaway

Note: If any condensate pipework is to be installed externally then it should be kept to a minimum and be insulated with a waterproof insulation and have a continuous fall. The total length of external pipe used should not exceed 3 metres.

Some examples of the type of condensate terminations can be found below.

1. Internal termination of codensate drainage pipe to internal stack.

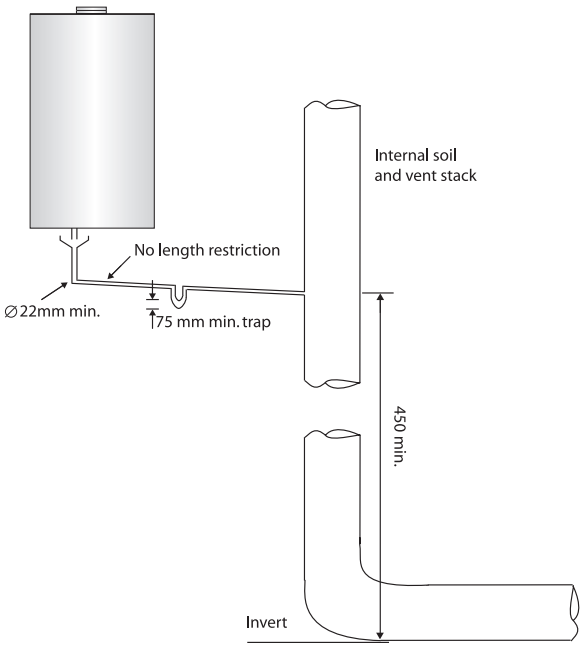

2. External terminaton of condensate drainage pipe via internal discharge branch (e.g. sink waste) and condensate siphon.

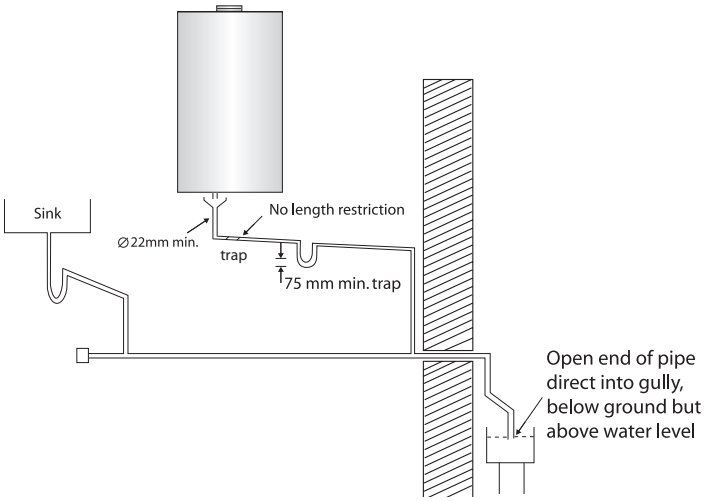

3. External termination of condensate drainage pipe via internal discharge branch (e.g. sink waste - proprietary fitting).

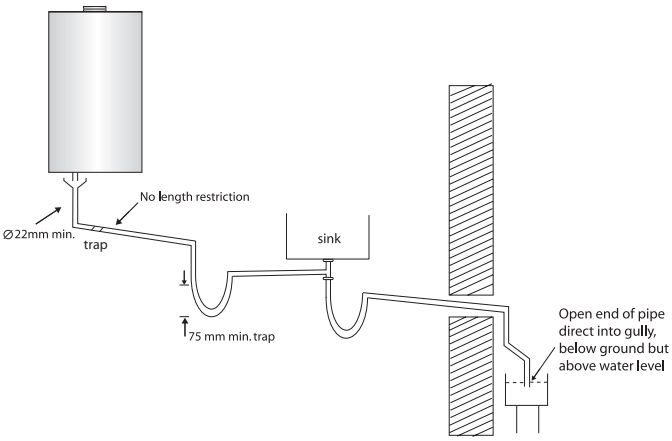

4. External termination of condensate drainage pipe via condensate siphon

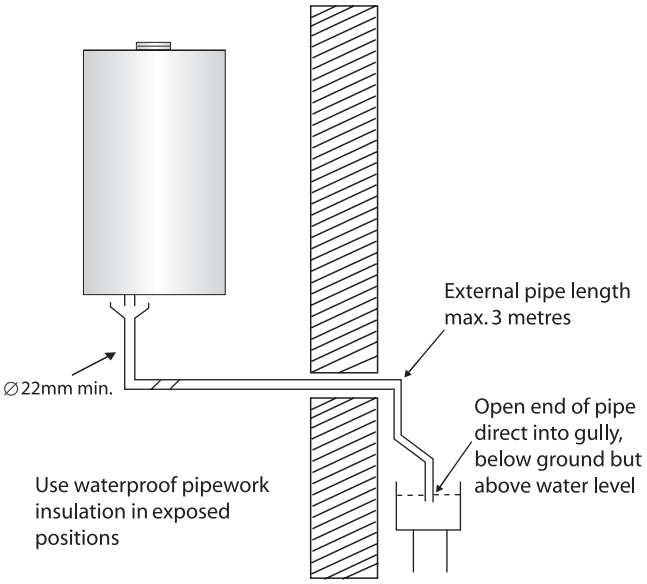

Downloaded From www.Gas101.Co.Uk

Installing the Boiler
Please check that you are familiar with the installation requirement before commencing work (pages 7 - 11).

The installation accessories described in the following list are included in the boiler packaging:
- Hanging bracket
- A paper template (showing the dimensions of the boiler with 5 mm side clearances)
- Connection valves (compression)
- Screws and washers
- Filling loop
- Installation, Servicing and User manual
- Flue gasket

Method of positioning the boiler on the wall
The paper template can be used to ensure the correct positioning of kitchen cabinets etc.

The paper template has to be fixed to the wall and used to locate the position of the hanging bracket and the centre for the flue hole.
Drill and plug the wall and secure the hanging bracket using the screws provided ensure the hanging bracket is level. Remove the boiler from its packaging and remove the front casing panel. Place the boiler on the hanging bracket.

NOTE: THE APPLIANCE MUST NOT BE FITTED ON A COMBUSTIBLE WALL SURFACE.

Connecting the Boiler to the System
- Remove the boiler casing as described on page 13;
- Remove the caps and connect the valves to the boiler using the washers provided.
- 4 x fibre washers for the CH flow and return, cold water inlet and hot water outlet connections.

Safety Valve Discharge and Condense Outlet
The pressure relief valve pipe is made of copper. It should terminate below the boiler safely outside the premises. Care should be taken that it does not terminate over an entrance or window or where a discharge of heated water could endanger occupants or passers by.

Fill the central heating and DHW system and bleed air from the system as described in the Commissioning instructions (page 26).

The system should be carefully checked for leaks, as frequent refilling could cause premature system corrosion or unnecessary scaling of the heat exchanger. The pipe from the trap should be connected to a drain as described in the relevant regulations.

Pay special attention not to bend the condensate silicone drain pipe is such a way as to interrupt the flow. Please only use drain pipe material compatible with condensate products (refer to BS 6798:2000).

The condensate flow can reach 2 litres/hour because of the acidity of the condensate products (Ph close to 2), take care before operation.

See page 11 for condensate discharge options.

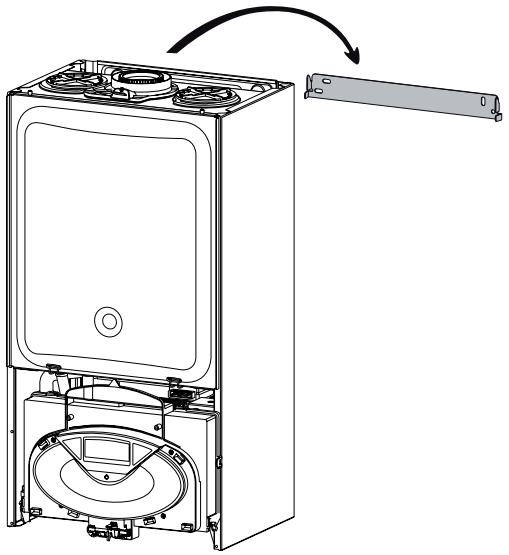

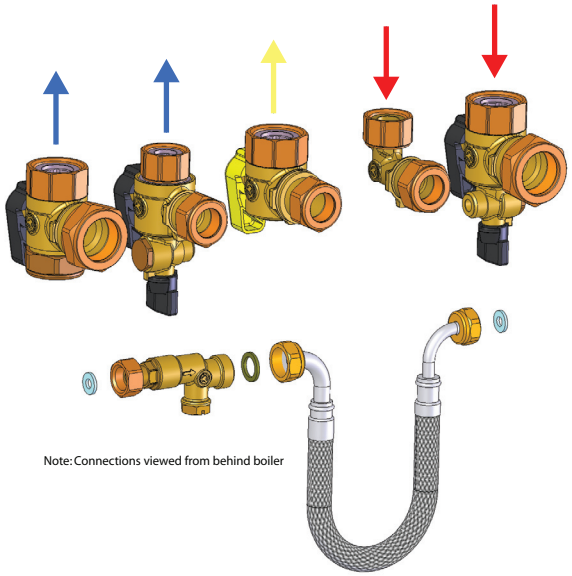

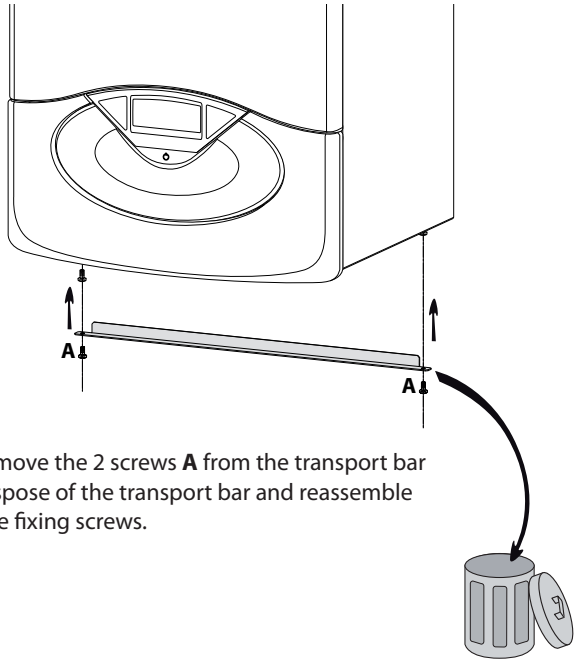

- remove the 2 screws **A** from the transport bar
- dispose of the transport bar and reassemble the fixing screws.

Downloaded From www.Gas101.Co.Uk

Gas connection

Make sure, using the labels on the packaging and the data plate on the appliance itself, that the boiler is in the correct country and that the gas category for which the boiler was designed corresponds to one of the categories available in the country where it will be used.
The gas supply piping must be created and measured out in compliance with specific legal requirements and in accordance with the maximum power of the boiler; you should also make sure that the shut-off valve is the right size and that it is connected correctly.
Check that the supplied gas corresponds to the type of gas for which the boiler was designed (see the data plate located on the appliance itself).
It is also important to check that the pressure of the gas (methane or LPG) you will be using to feed the boiler is suitable, because if it is insufficient the power may be reduced, causing inconvenience for the user.

Water connection
The illustration below shows the connections for the water and gas attachments of the boiler. See valves configuration on page 13.
Check that the maximum water mains pressure does not exceed 6 bar; if it does, a pressure reducing valve must be installed.
For the measuring of the pipes and of the heating bodies in the heating system, the residual head value should be calculated as a function of the requested flow rate, in accordance with the values shown in the circulation pump graph.

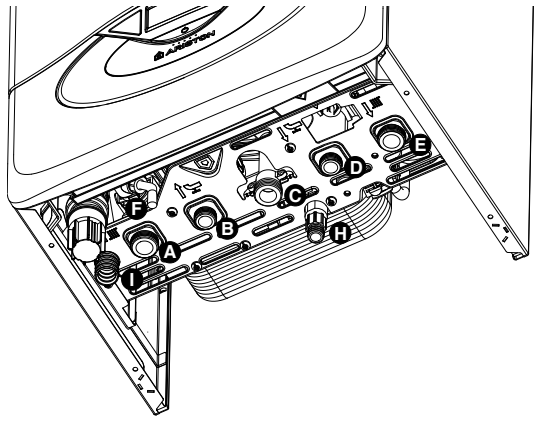

A. Central heating Flow
B. Domestic Hot Water Outlet
C. Gas Inlet
D. Domestic Cold Water Inlet
E. Central Heating Return
F. Safety Valve Discharge
H. Drain Valve
I. Drain condensate

Instructions for opening the casing and performing an internal inspection
Before performing any work on the boiler, first disconnect it from the electrical power supply using the external bipolar switch removing the fuse and shutting off the gas valve.
To access the inside of the boiler, the following is necessary:
1. Remove the casing by unhooking it from the control panel (a)
2. Loosen the two screws on the front casing (b), pull it forwards and unhook it from the upper pins (c)
3. Lower the control panel (d)
4. Unhook the two clips on the combustion chamber panel and lift off (e).

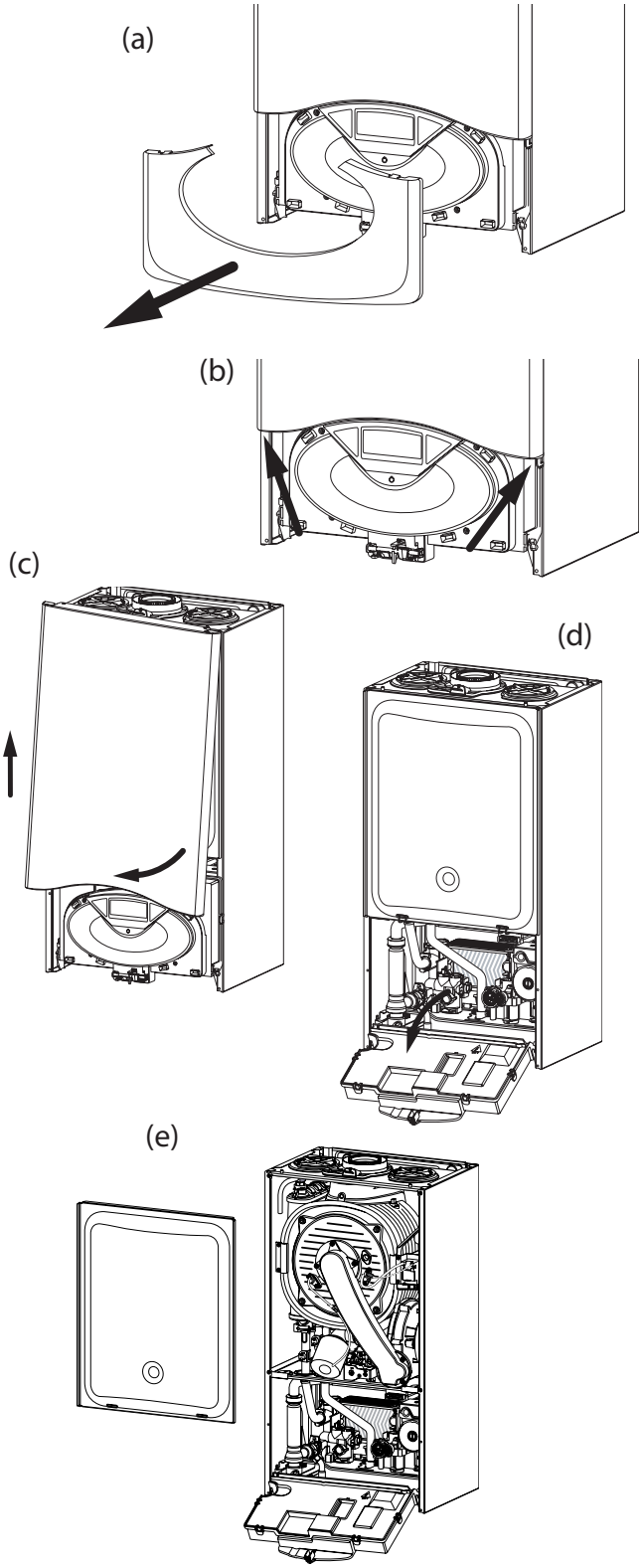

Downloaded From www.Gas101.Co.Uk

To calculate the size of the heating installation, refer to the "Available pressure" graph below.

Graph representing the available circulation pump pressure ΔT20°C

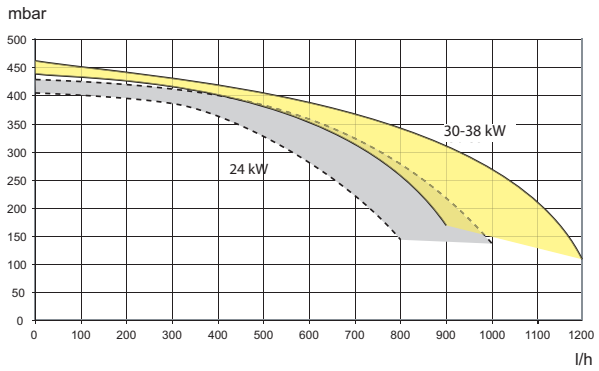

⚠ **Before the equipment is used, for the first time the trap must be filled with water. To do this, add approximately 1/4 litre of water via the flue outlet before fitting the flue system, or unscrew the cap on the trap positioned underneath the boiler, fill it with water and refit it**

⚠ **Warning! Insufficient water in the trap can temporarily cause the flue gas to be expelled into the surrounding ambient air**

Underfloor heating

For appliances with underfloor heating, fit a safety thermostat onto the underfloor heating outlet. For the electrical connection of the thermostat see the section on "Electrical connections - page 24".

If the outlet temperature is too high, the boiler will stop both domestic hot water and the heating production and the error code 1 16 "floor thermostat contact open" will appear on the display. The boiler will restart when the thermostat is closed during automatic resetting.

If the thermostat cannot be installed, the underfloor heating equipment must be protected by a thermostatic valve, or by a by-pass to prevent the floor from reaching too high a temperature.

Water circuit diagram

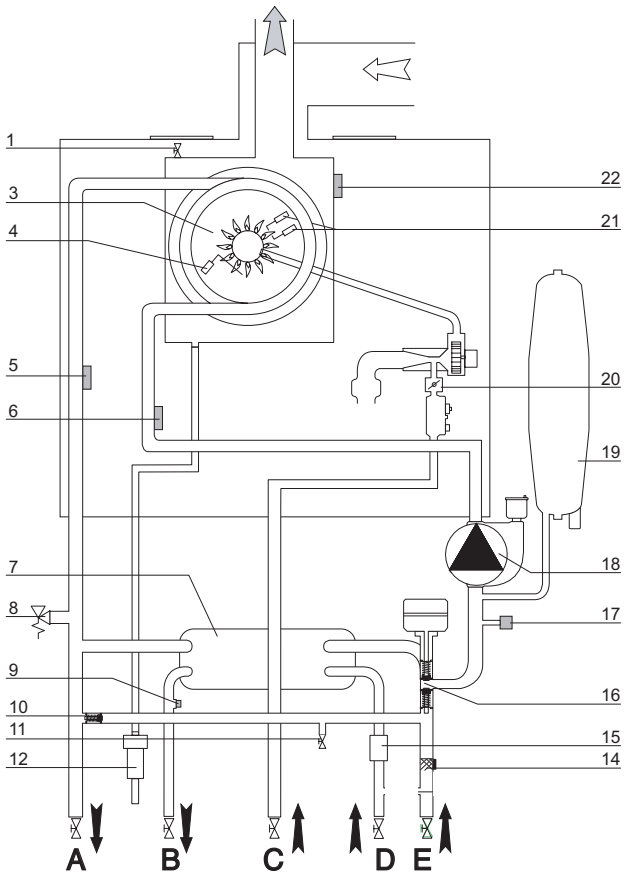

1. Manual air vent
3. Burner
4. Detection electrode
5. C.H. flow temperature probe
6. C.H. return temperature probe
7. Secondary heat exchanger
8. C.H. pressure relief valve
9. D.H.W. temperature probe
10. By-pass
11. Drain valve
12. Condensate trap
14. C.H. circuit filter
15. D.H.W. Flow switch
16. diverter valve
17. water pressure sensor
18. circulation Pump
19. expansion vessel
20. modulating Fan
21. ignition electrodes
22. thermal fuse

Downloaded From www.Gas101.Co.Uk

Connecting the Flue

Flue System

The provision for satisfactory flue termination must be made as described in BS 5440-1.

The appliance must be installed so that the flue terminal is exposed to outdoor air.

The terminal must not discharge into another room or space such as an outhouse or lean-to.

It is important that the position of the terminal allows a free passage of air across it at all times.

The terminal should be located with due regard for the damage or discolouration that might occur on buildings in the vicinity, it must also be located in a place not likely to cause nuisance.

In cold or humid weather water vapour may condense on leaving the flue terminal.

The effect of such "steaming" must be considered.

If the terminal is less than 2 metres above a balcony, above ground or above a flat roof to which people have access, then a suitable stainless steel terminal guard must be fitted.

The minimum acceptable spacing from the terminal to obstructions and ventilation openings are specified in Fig. 1.

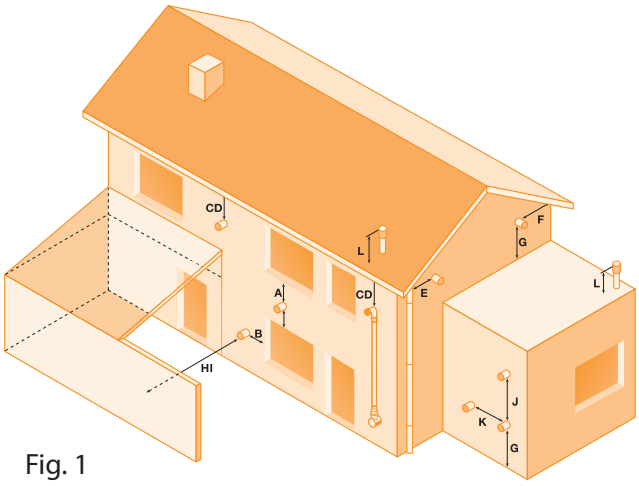

Fig. 1

- A Directly below an opening, window, etc	300 mm
- B Horizontally to an opening, window, etc	300 mm
- C Below gutters, soils pipes or drain pipes	75 mm
- D Below eaves	200 mm
- E From vertical drain pipe or soil pipe	75 mm
- F From internal or external corner	300 mm
- G Above ground, roof or balcony level	300 mm
- H From a surface facing the terminal	2500 mm
- I From a terminal facing a terminal	2500 mm
- J Vertically from a terminal on the same wall	1500 mm
- K Horizontally from an terminal on the same wall	300 mm
- L Fixed by vertical flue terminal	

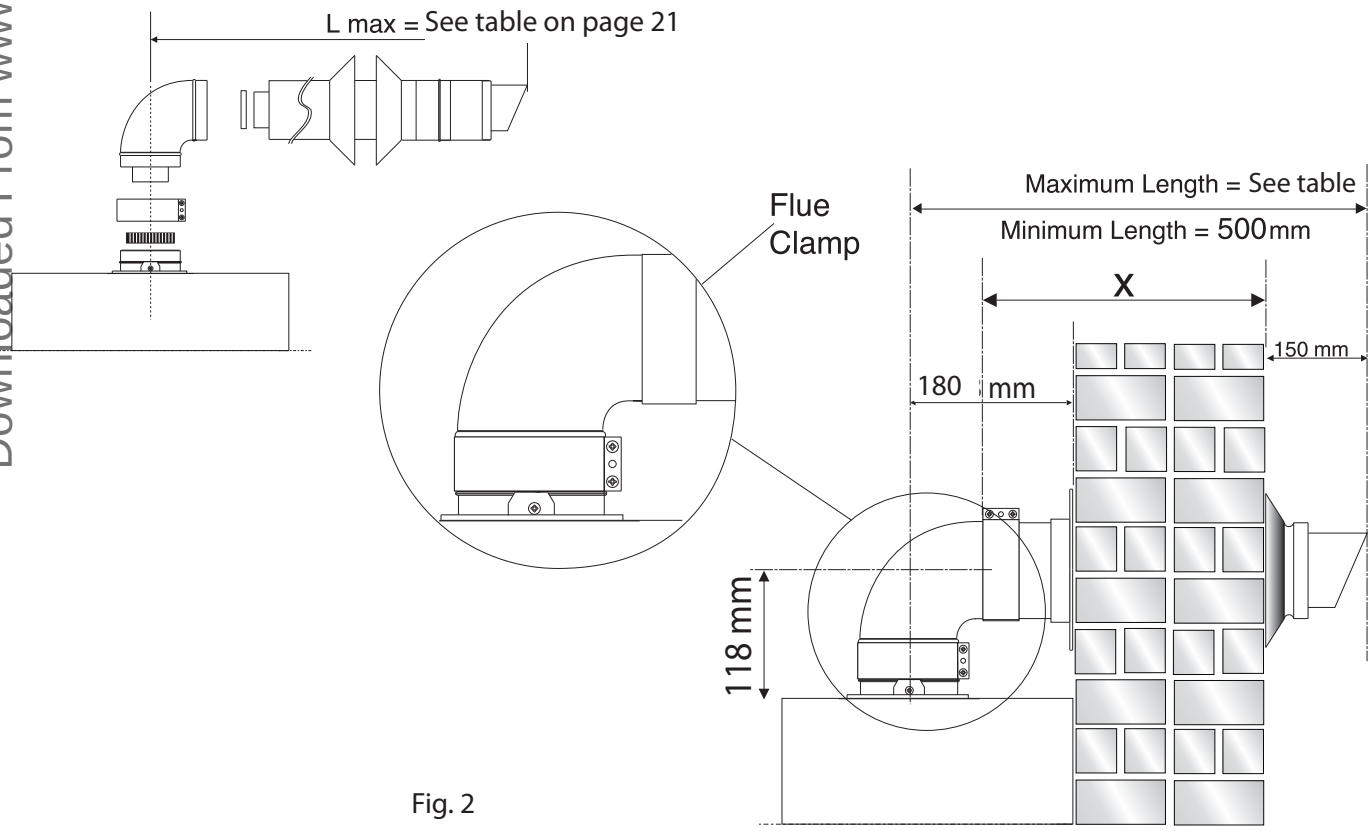

Fig. 2

Downloaded From www.Gas101.Co.Uk

Warning
The exhaust gas ducts must not be in contact with or close to inflammable material and must not pass through building structures or walls made of inflammable material.
When replacing an old appliance, the flue system must be changed.

Important
Ensure that the flue is not blocked.
Ensure that the flue is supported and assembled in accordance with these instructions.

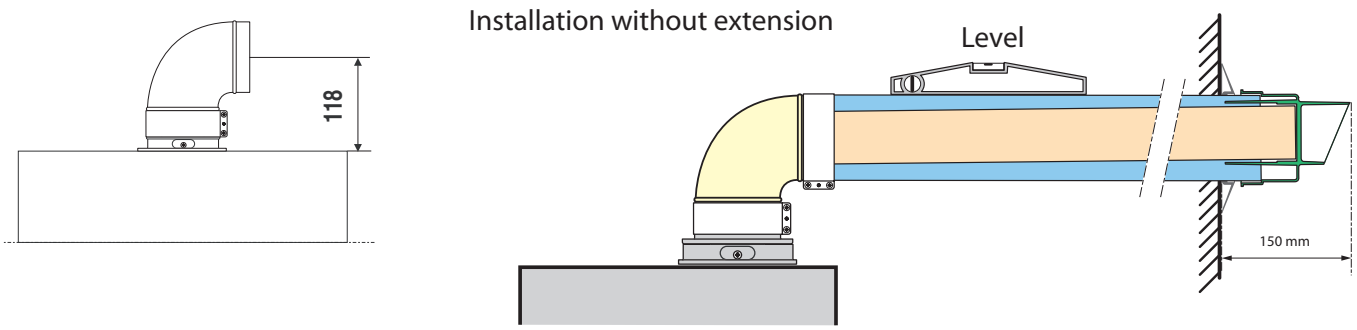

Fig. 3

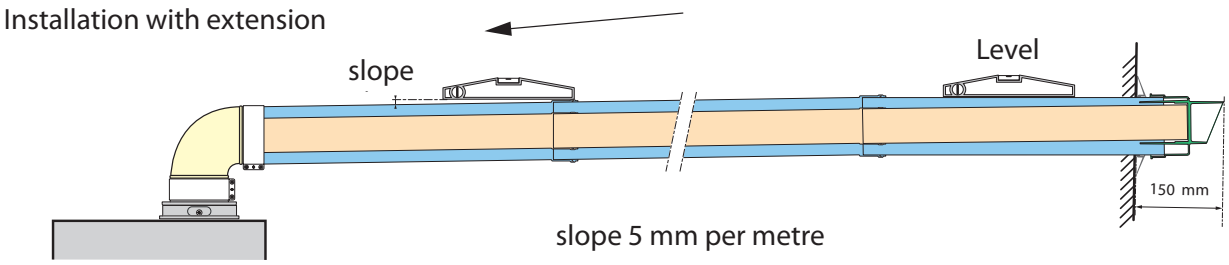

Fitting the Coaxial Flue
(Ø 60 / 100 Horizontal)

Contents:
1x Silicone O-Ring (60mm)
1x Elbow (90°)
2x Wall Seals (Internal & External)
1x Flue Pipe including Terminal (1 metre - 60/100)
2x Flue Clamps
4x Screws
2x Seals

Once the boiler has been positioned on the wall, fit the rubber flue seal into the internal flue turret (see diagram opposite),

insert the elbow into the socket and rotate to the required position. note: It is possible to rotate the elbow 360° on its vertical axis.

Using the flue clamp, seals and screws supplied (Fig 4) secure the elbow to the boiler.

The 1 metre horizontal flue kit (3318073) supplied is suitable for an exact X dimension of 753mm.

Measure the distance from the face of the external wall to the face of the flue elbow (X - Fig 2), this figure must now be subtracted from 753mm, you now have the total amount to be cut from the plain end of the flue.

Draw a circle around the outer flue and cut the flue to the required length taking care not to cut the inner flue, next cut the inner flue ensuring that the length between the inner and outer flue is maintained. (Fig 4).

e.g.
X = 555mm
753-555 = 198mm (Length to be cut from the plain end of the flue).

Once cut to the required length, ensure that the flue is free from burrs and reassemble the flue. If fitting the flue from inside of the building attach the grey outer wall seal to the flue terminal and push the flue through the hole, once the wall seal has passed through the hole, pull the flue back until the seal is flush with the wall. Alternatively, the flue can be installed from outside of the building, the grey outer seal being fitted last.

Should the flue require extending, the flue connections are push fit, however, one flue bracket should be used to secure each metre of flue.

Note: See table for maximum and minimum flue runs.

Downloaded From www.Gas101.Co.Uk

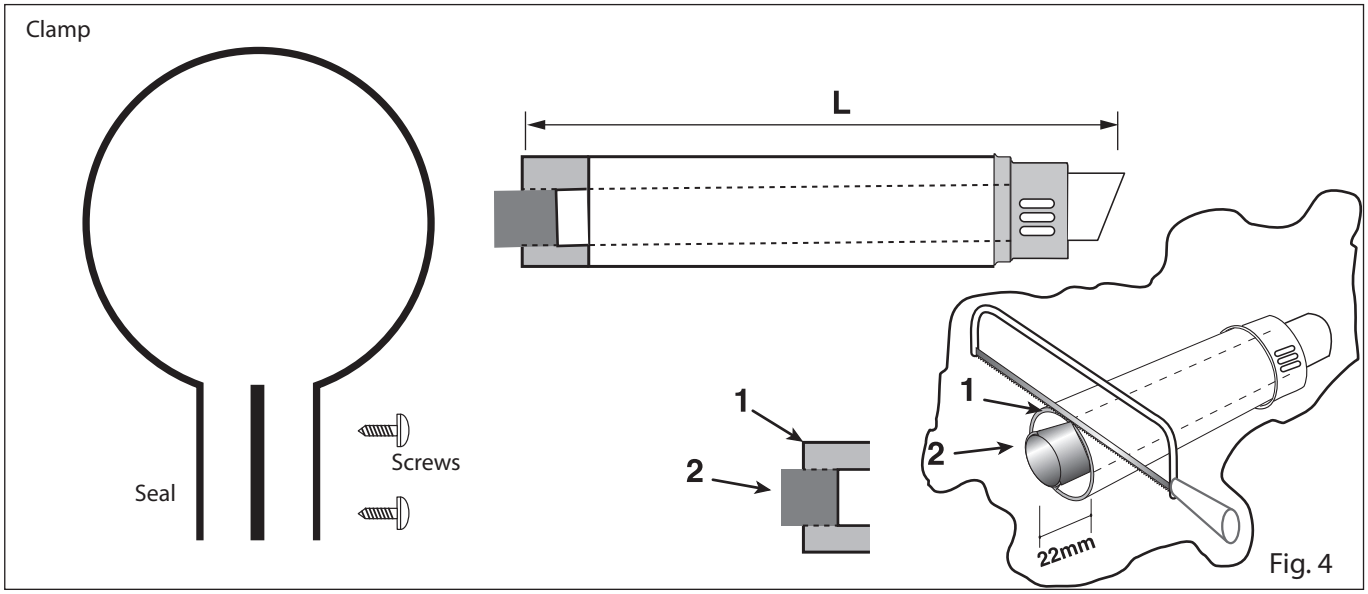

Fig. 4

Fitting the 5" Flue
(Ø 80 / 125 Horizontal/vertical)

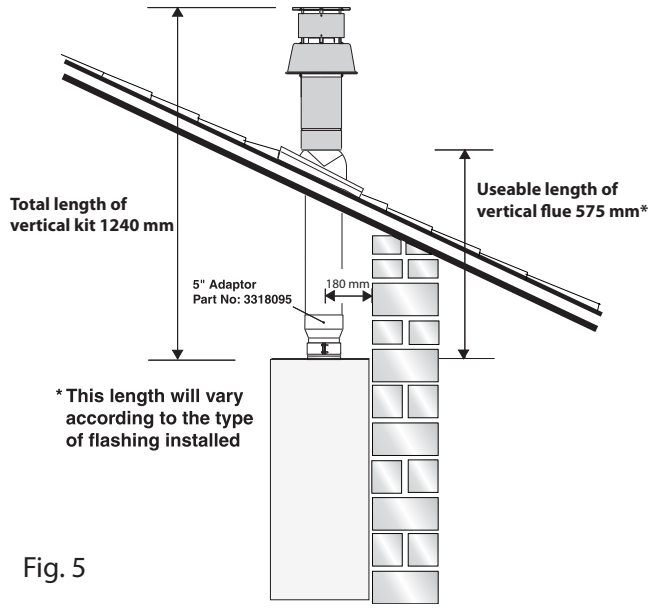

Fig. 5

Once the boiler has been positioned on the wall, it is necessary to insert the Ø80/125 adaptor (Fig. 5) for both horizontal and vertical flue runs into the boiler flue socket (not supplied with flue kit - Part No 3318095).

Push the adaptor onto the boilers flue connection, grease the seals then add extensions or elbows as required, secure the adaptor, using the clamp and screws provided.

To fit extensions or elbows it is first necessary to ensure that the lip seal is fitted correctly into the inner flue, once verified, it is simply necessary to push them together, no clamps are necessary to secure the flue components.

Before proceeding to fit the flue, ensure that the maximum flue length has not been exceeded (See the tables) and that all elbows and bends have been taken into consideration, the maximum flue length is 10 metres, for each additional 90° elbow 1 metre must be subtracted from the total flue length, and for each 45° 0.5 metres must be subtracted from the total flue length (the height of the vertical adaptor and a 45° bend can be seen in Fig.6 and a 90° bend in Fig. 7).

Note: DO NOT cut the vertical flue kit.

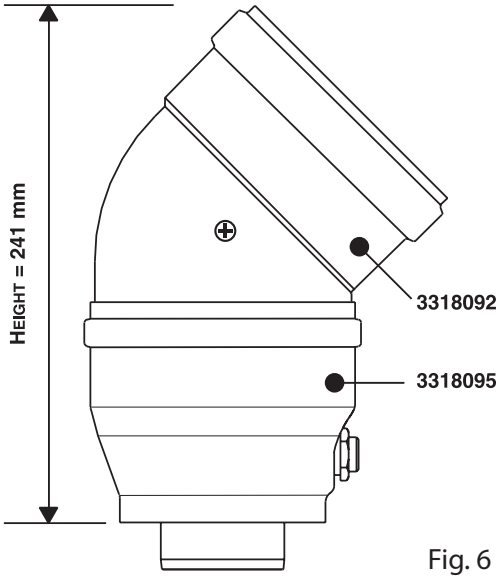

Fig. 6

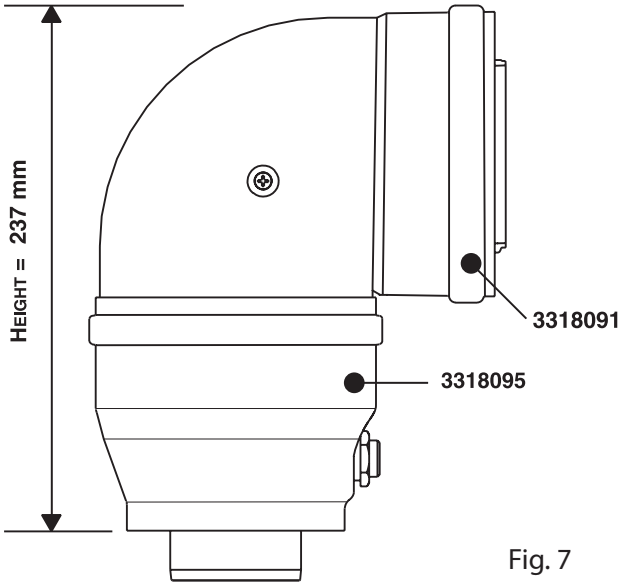

Fig. 7

Downloaded From www.Gas101.Co.Uk

Fitting the Coaxial Flue
(Ø 60 / 100 Vertical)

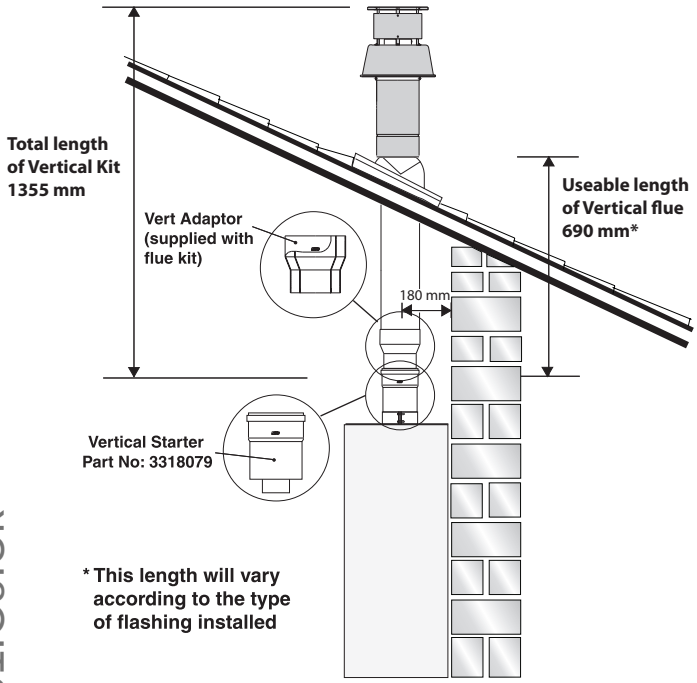

Fig. 7

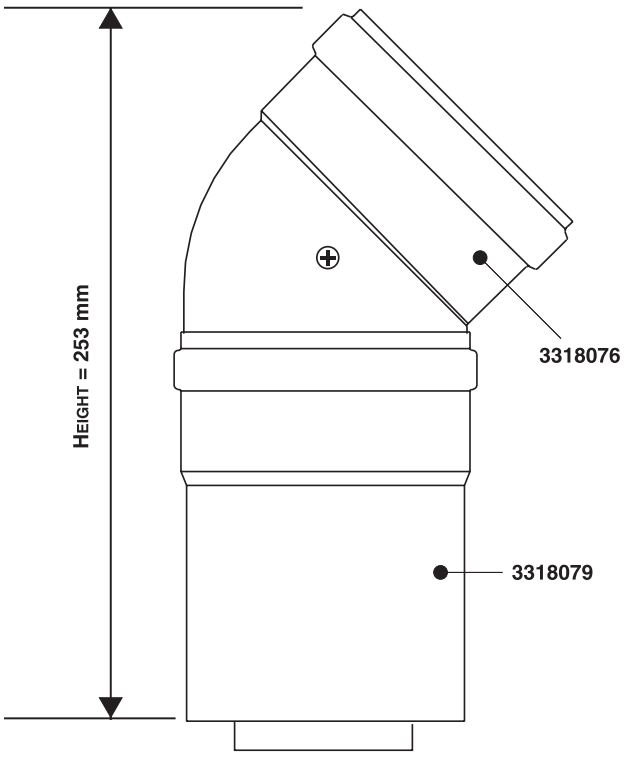

Fig. 8

Note: See table for maximum and minimum flue runs.

Contents:
1x Silicone O-Ring (60mm)
1x Conical Adaptor (60/100mm)
1x Vertical Flue Kit (80/125mm)
3x Screws

The vertical flue kit is supplied with a specially designed weather proof terminal fitted, it can be used either with a flat roof or a pitched roof.

The Vertical flue kits useable lengths with the pitched roof flashings are indicated in Fig. 7.

Before proceeding to fit the flue, ensure that the maximum flue length has not been exceeded (See the tables) and that all elbows and bends have been taken into consideration, the maximum flue length is see table, for each additional 90° elbow 1 metre must be subtracted from the total flue length, and for each 45° 0.5 metres must be subtracted from the total flue length (the height of the vertical adaptor and a 45° bend can be seen in Fig. 8).

Mark the position of the flue hole in the ceiling and/or roof (see Fig. 7 for distance from wall to the centre of the flue).

Cut a 130mm diameter hole through the ceiling and/or roof and fit the flashing plate to the roof.

DO NOT cut the vertical flue kit.

To connect the vertical flue kit directly to the boiler, place the vertical starter kit (Part No. 3318079) (see Fig. 7) onto the exhaust manifold and secure with the clamp, fit the vertical adaptor onto the vertical starter kit (note: there is no need to use a clamp to secure this as it is a push fit connection), the vertical flue kit must then be inserted through the roof flashing, this will ensure that the correct clearance above the roof is provided as the terminal is a fixed height.

Should extensions be required, they are available in 1 metre (Part No. 3318077), 500mm (Part No. 3318078) and 160mm lengths, they must be connected directly to the vertical starter kit before connecting the adaptor to allow the vertical flue kit to be fitted. In the event that extension pieces need to be shortened, they must only be cut at the male end and it must be ensured that the inner and outer flue remain flush.

When utilising the vertical flue system, action must be taken to ensure that the flue is supported adequately to prevent the weight being transferred to the appliance flue connection by using 1 flue bracket per extension.

When the flue passes through a ceiling or wooden floor, there must be an air gap of 25mm between any part of the flue system and any combustible material. The use of a ceiling plate will facilitate this. Also when the flue passes from one room to another a fire stop must be fitted to prevent the passage of smoke or fire, irrespective of the structural material through which the flue passes.

Downloaded From www.Gas101.Co.Uk

Fitting the Twin Pipe (Ø80 / 80)

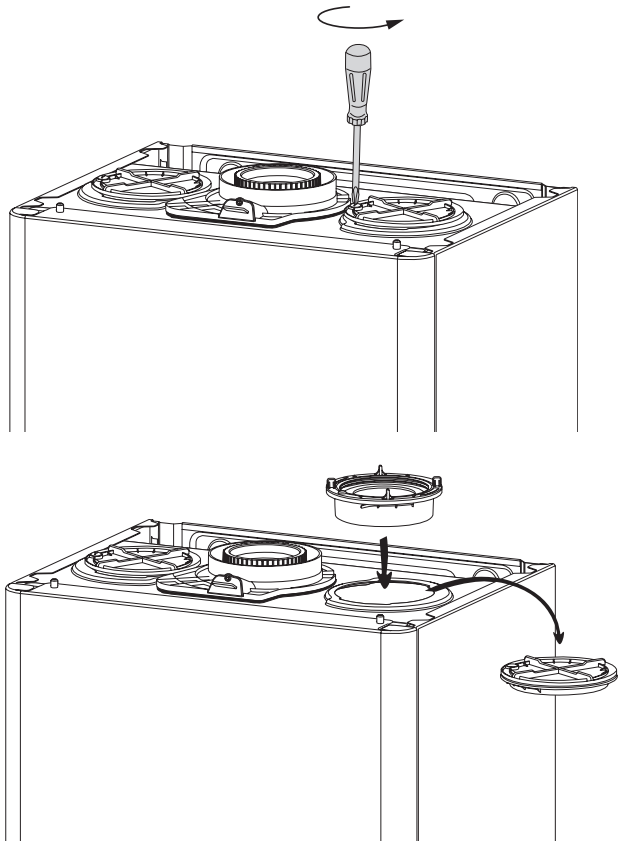

Note: See table for maximum and minimum flue runs.

Where it is not possible to terminate the flue within the distance permitted for coaxial flues, the twin flue pipe can be used by fitting a special adaptor to the flue connector and using the aperture for the air intake located on top of the combustion chamber.

Always ensure that the flue is adequately supported, using one flue bracket per extension and avoiding low points. (MTS supply suitable clamps as Part No. 705778).
To utilise the air intake it is necessary to:

1) Take the air intake cover off the top of the appliance
2) Assemble the flange on the header supplied with the boiler
3) Insert the header on the tube or the elbow up until the lower stop (you do not have to use the washer).
4) Insert the elbow/header in the boiler air intake hole and fasten it with screws.

The twin flue pipes can be fitted with or without additional elbows and need no clamps, simply ensure that the red o-ring is inserted in the female end of the flue pipe and push the extension piece fully into the previous section of flue pipe or elbow, check that the o-ring is not dislodged when assembling the flue (greasing the seal will aid assembly).

Twin pipe can also be converted back to Coaxial flue to enable vertical termination with a coaxial kit by using the pipe bridge (Twin - Coaxial Adaptor - Part No. 3318089). When running the twin flue pipe vertically.

It is not possible to terminate concentrically horizontally. Termination is only possible with separate air and exhaust terminals.

When siting the twin flue pipe, the air intake and exhaust terminals must terminate on the same wall, the centres of the terminals must be a minimum of 280 mm apart and the air intake must not be sited above the exhaust terminal (refer to Fig. 10). The air intake pipe can be run horizontally, however, the terminal and the final 1 metre of flue must be installed either horizontally or with a slight fall away from the boiler to avoid rain ingress.

It is also strongly recommended that the air intake pipe run be constructed of insulated pipe to prevent condense forming on the outside of the tube.

The maximum permissible flue length for twin flue is dependent on the type of run used (see table on page 21).

For further information relating to flue runs not illustrated, please contact the Technical Department on 0870 241 8180.

⚠ **Use only the specific condensation flue kit**

Downloaded From www.Gas101.Co.Uk

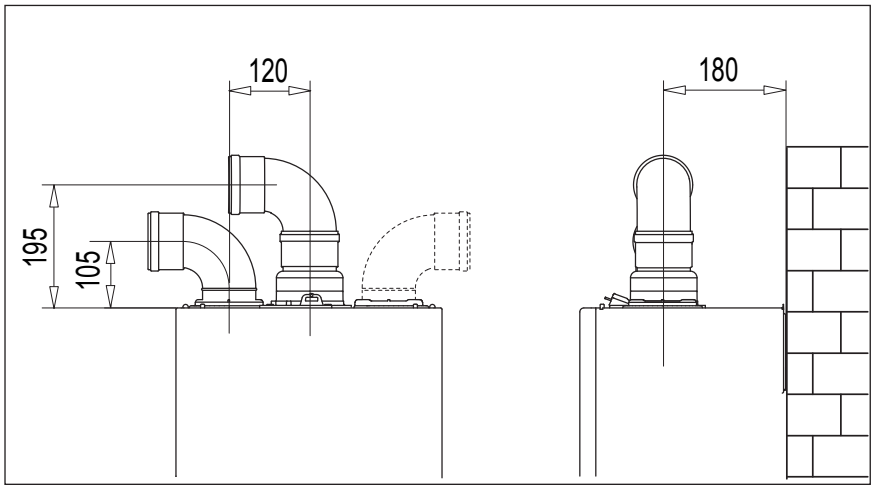

Fig. 9

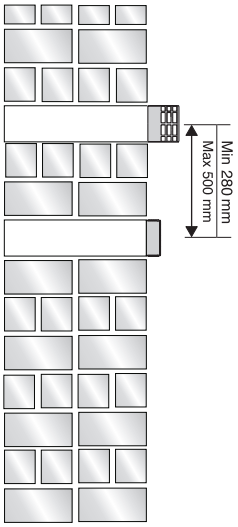

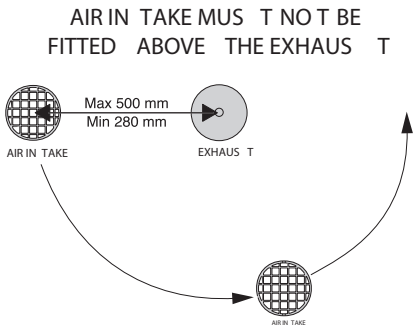

Fig. 10

For coaxial systems, the maximum development value, mentioned in the table below also takes into account an elbow.
For twin flue systems the maximum development value, mentioned in the table includes the exhaust gas/air intake terminal.

Type 5 outlets should respect the following instructions:
1- Use the same ø 80 mm flue pipes for the air intakes and exhaust gas ducts.
2- If you need to insert elbows in the air intake and exhaust gas ducts, you should consider for each one the equivalent length to be included in the calculation of developed length.
3- The exhaust gas duct should jut above the roof by at least 0.5 m.
4- The intake and exhaust gas ducts in Type C13 + C53 must be installed on the same wall, or where the exhaust is vertical and the air intake horizontal, the terminals must be on the same side of the building.

Downloaded From www.Gas101.Co.Uk

Table of flue gas exhaust duct lengths

COAXIAL SYSTEM	FLUE TYPE		MAX LENGTH	DIAMETER of PIPE
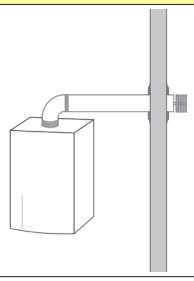	**C13** Flue gas exhaust and air suction duct through external wall in the same range of pressure	24 kW	12 m 36 m	60/100 80/125
		30 kW	10 m 30 m	60/100 80/125
		38 kW	6 m 18 m	60/100 80/125
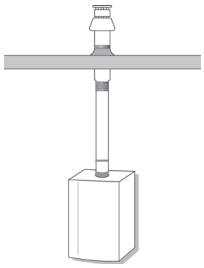	**C 33** Flue gas exhaust and air suction duct from outside with roof terminal in the same range of pressure	24 kW	12 m 42 m	60/100 80/125
		30 kW	10 m 35 m	60/100 80/125
		38 kW	8 m 21 m	60/100 80/125
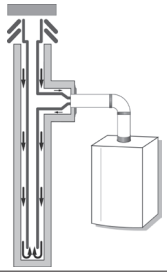	**C43** Individual or shared flue gas exhaust and air suction through flue ducting built into the building	24 kW	12 m 0 m	60/100 80/125
		30 kW	10 m 0 m	60/100 80/125
		38 kW	8 m 0 m	60/100 80/125

Downloaded From www.Gas101.Co.Uk

TWIN-PIPE SYSTEM	FLUE TYPE		MAX LENGTH	DIAMETER of PIPE
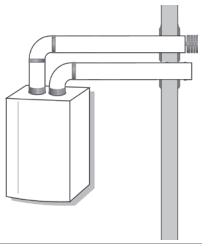	**C13** Flue gas exhaust and air suction duct through external wall in the same range of pressure	24 kW	36 m (S1=S2)	80/80
		30 kW	30 m (S1=S2)	
		35 kW	18 m (S1=S2)	
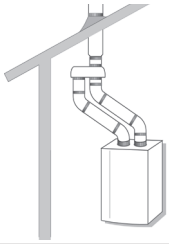	**C 33** Flue gas exhaust andair suction duct from outsidewithroof terminalin the same range of pressure	24 kW	60 m (S1=S2)	80/80
		30 kW	50 m (S1=S2)	
		35 kW	21 m (S1=S2)	
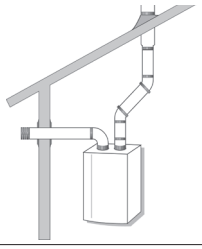	**C53** Flue gas exhaust leading outside and air suction duct through external wall not in the same range of pressure	24 kW	84 m (S1+S2)	80/80
		30 kW	70 m (S1+S2)	
		35 kW	42 m (S1+S2)	

S1 = Air intake S2 = Flue gas exhaust

S1 = S2 - Air intake and flue gas exhaust equal lengths
S1 + S2 - Air intake and flue gas exhaust unequal lengths

Downloaded From www.Gas101.Co.Uk

WARNING
Before performing any work on the boiler, first disconnect it from the electrical power supply using the external bipolar switch and remove the fuse.

Electrical connections
For increased safety, ask a qualified technician to perform a thorough check of the electrical system.
The manufacturer is not responsible for any damage caused by the lack of a suitable earthing system or by the malfunctioning of the electricity mains supply.
Make sure that the system is able to withstand the maximum power absorbed by the boiler (this is indicated on the appliance data plate). Check that the section of the wires is suitable and is not less 0,75 mm^2
The appliance must be connected to an effiecient earthing system if it is to operate correctly.
The power supply cable must be connected to a 230V-50Hz network, where the L-N poles and the earth connection are all respected.
Important!
In the event that the power supply cable must be changed, replace it with one with the same specifications.

Power supply cable

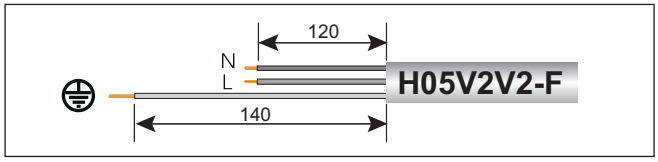

Important!
The appliance is supplied with a fly-lead already connected, this must be connected to a 240V supply fused at 3 Amp and must facilitate completed electrical isolation of the appliance, by use od a fused double pole isolator having a contact separation of at least 3mm in all poles or alternatively by means of a 3A fused three pin plug and unswitched shuttered socket outlet both complying with BS1363.

The use of multiplugs, extension leads or adaptors is strictly prohibited.
It is strictly forbidden to use the piping from the hydraulic, heating and gas systems for the appliance earthing connection.
The boiler is not protected against the effects caused by lightning. If the mains fuses need to be replaced, use 2A rapid fuses.

Peripheral unit connection
To access peripheral unit connections carry out the following steps:
- Disconnect the boiler from the power supply
- Remove the casing by unhooking it from the instrument panel
- Rotate the control panel while pulling it forwards
- Unscrew the three screws on the back cover of the instrument panel
- Unhook the right side clip and the right front clip; then lift the flap

The terminal board (see figure) may be accessed in order to connect:
Outdoor sensor
Room thermostat 1
- other plugs: for managing multi-zones multitemperatures, Solar kit, etc...

Optional P.C.B.s can also be installed for further accessories:
BUS P.C.B. **Clima Manager**
Modulating Room Sensor
Programmable Room Thermostat
Outdoor Sensor

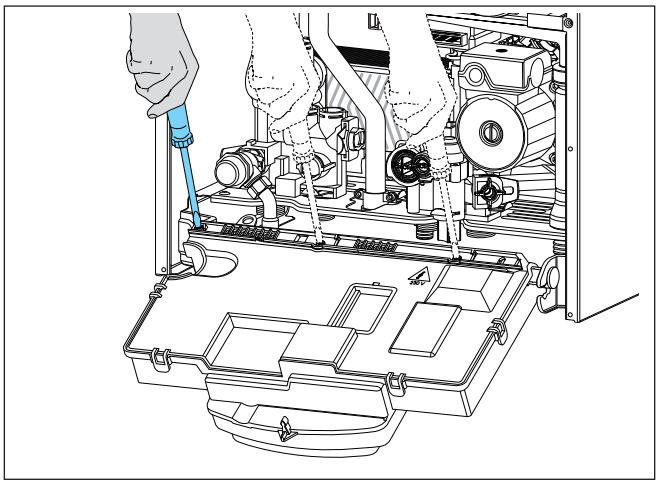

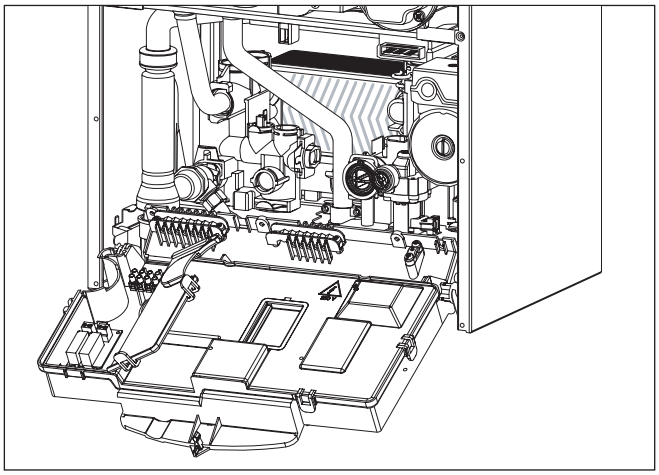

Caution!
For the connection and positioning of the wires belonging to optional peripheral units, please refer to the installation manuals of these units.

Downloaded From www.Gas101.Co.Uk

Room thermostat connection

- Introduce the thermostat wire
- Loosen the cable clamp using a screwdriver and insert the wires leading from the room thermostat one at a time.
- Connect the wires to the terminals as indicated in the figure below, removing the link
- Make sure that they are well connected and that they are not subject to stress when the control panel lid is opened or closed
- Close the flap again, then replace the control panel cover and the front casing.

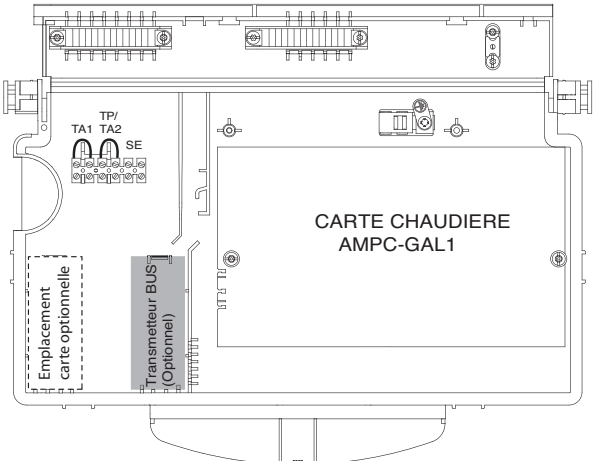

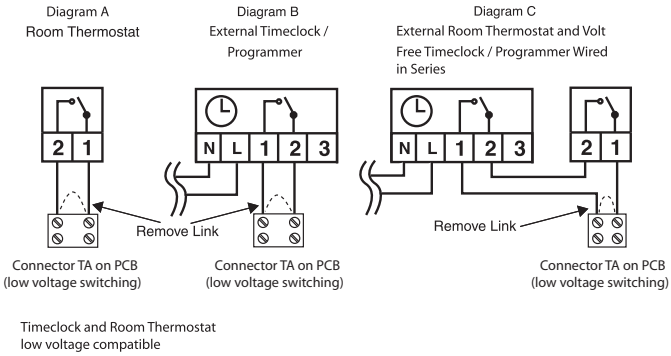

Outdoor sensor connection

- Introduce the outdoor sensor wires
- Loosen the cable clamp using a screwdriver and insert the wires leading from the outdoor sensor one at a time.
- Connect the wires to the terminals as indicated in the figure below;
- Make sure that they are well connected and that they are not subject to stress when the control panel lid is opened or closed;
- Close the flap again, then replace the control panel cover and the front casing.
- Refer to page 39 for setting the parameters when using the outdoor sensor.

Outdoor Sensor

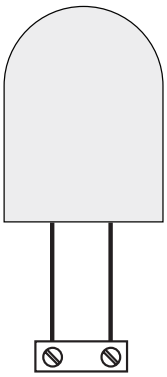

Connector SE on PCB

NOTE: **WHEN CONNECTING THE BOILER TO EXTERNAL CONTROLS, DO NOT RUN 240V CABLES AND CABLES FOR SWITCHING CIRCUITS (WHICH ARE LOW VOLTAGE) TOGETHER, USE SEPERATE CABLES TO PREVENT INDUCED VOLTAGE ON THE LOW VOLTAGE CIRCUITS.**

Downloaded From www.Gas101.Co.Uk

Electrical diagram

For increased safety, ask a qualified technician to perform a thorough check of the electrical system.

The manufacturer is not responsible for any damage caused by the lack of a suitable earthing system or by the malfunctioning of the electricity mains supply.

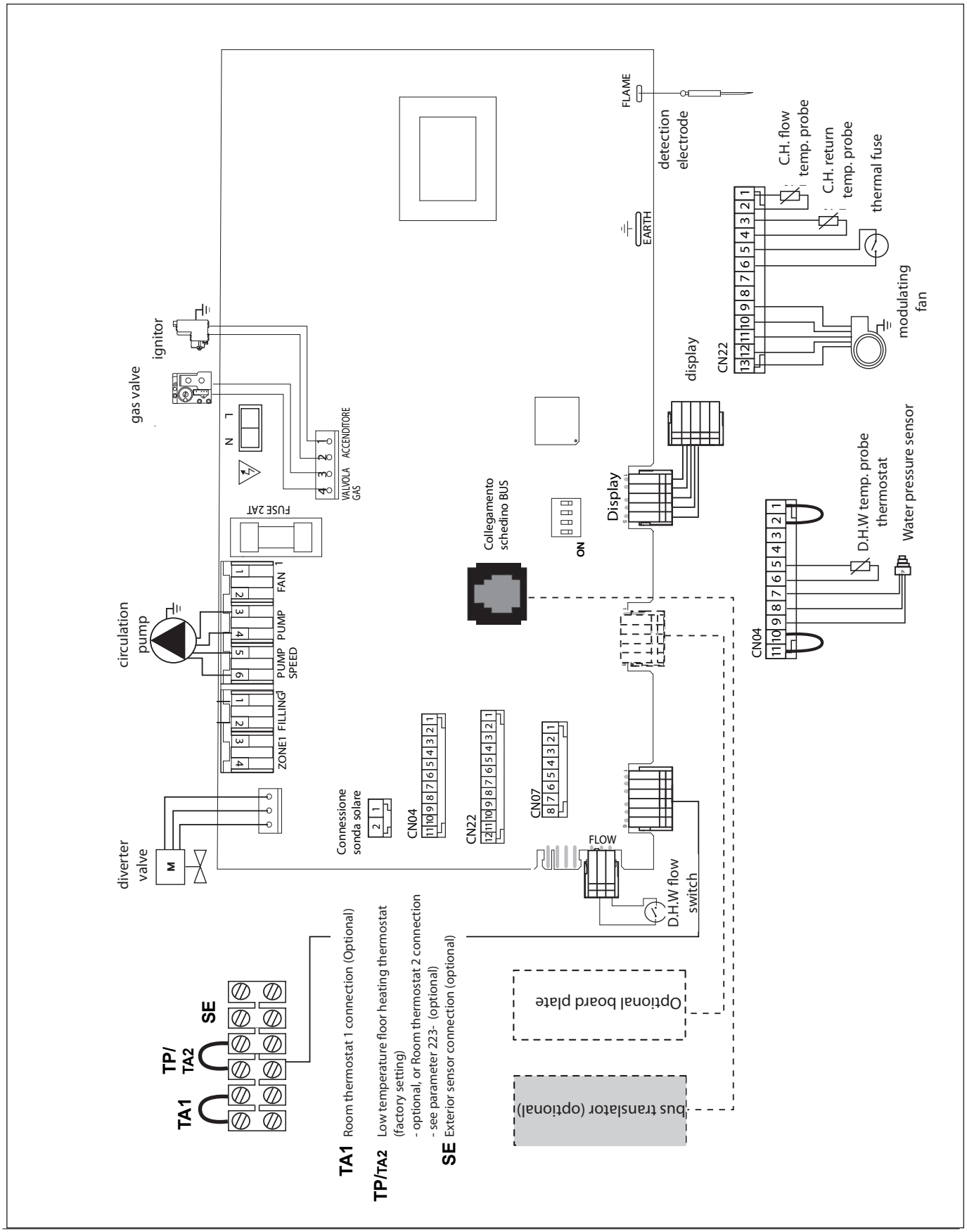

Downloaded From www.Gas101.Co.Uk

Initial preparation
MTS (GB) Limited support the benchmark initiative. On pages pages 65 and 66 of this manual the Benchmark Commissioning Checklist and Service interval Record can be found. It is important that this is completed in the presence of your customer, they are shown how to use it, and it is signed by them. Please instruct your customer that they must have this manual with them whenever they contact a service engineer or us.

Preliminary electrical system checks to ensure electrical safety must be carried out by a competent person i.e. polarity, earth continuity, resistance to earth and short circuit.

Electricity supply
- Check that the voltage and frequency of the electricity supply correspond to the data shown on the boiler data plate;
- Make sure that the earthing connection is efficient.

Filling the Heating System:
Switch the electrical supply to the boiler on in order to view the system pressure on the display;
Remove the front casing panel and lower the control panel as described on page 13).
Open the central heating flow and return cocks supplied with the connection kit;
Lift the cap on the automatic air release valve and leave open permanently;
Close all air release valves on the central heating system;
Gradually open the valves at the filling point (filling loop) until water is heard to flow, do not open fully;
Open each air release tap starting with the lowest point and close them only when clear water free of air is visible;
Purge the air from the pump by unscrewing the pump plug anti-clockwise, also manually rotate the pump shaft in the direction indicated by the pump label to ensure the pump is free;
Refit the pump plug;
Continue filling the system until at least 1.5 bar registers on the pressure gauge;
Inspect the system for water tightness and remedy any leaks discovered.

IMPORTANT!
MANUALLY VENT THE HEAT EXCHANGER AT THE MANUAL AIR VENT. FAILURE TO VENT ADEQUATELY MAY DAMAGE THE HEAT EXCHANGER (PAGE 7, LEGEND 2).

Filling of the DHW System:
Close all hot water draw off taps;
Open the cold water inlet cock supplied with the connection kit;
Slowly open each draw off tap and close them only when clear water, free of bubbles, is visible.

Gas Supply:
Inspect the entire installation including the gas meter and test for tightness. The entire installation should be in accordance with the relevant standards. In GB this is BS 6891 and in IE this is the current edition of I.S.813.

The connection on the the appliance is a 15mm nut and olive located at the rear of the gas service cock.

If the gas supply serves other appliances, ensure that an adequate supply is available both to the boiler and the other appliances when they are in use at the same time.

Pipe work must be of an adequate size. Pipes of less than 22mm should not be used, final connection being 15mm.

Open the gas cock (supplied with the connection kit) to the appliance and check the gas connection on the appliance for leaks.

Water Treatment:
The boiler is equipped with a stainless steel heat exchanger.
The detailed recommendations for water treatment are given in BS 7593:1992 (Treatment of water in domestic hot water central heating systems); the following notes are given for general guidance;

If the boiler is installed on an existing system, any unsuitable additives must be removed;

Under no circumstances should the boiler be fired before the system has been thoroughly flushed; the flushing procedure must be in line with BS7593:1992.

Firstly fill the central heating system with the power off, and flush through cold, fill the central heating system again, adding a flushing detergent, run the boiler on central heating until it reaches its operating temperature and flush the system, refill the system with a suitable corrosion inhibitor,

NOTE: FAILURE TO CARRY OUT THE FLUSHING PROCEDURE WILL RESULT IN THE WARRANTY BECOMING VOID.

Downloaded From www.Gas101.Co.Uk

FIRST IGNITION OPERATION

Date . . . . . .

Installer . . . . . .

1. Check the electrical supply.

Complete (Y/N) . . . . . .

2. Check the type of gas and change the gas if necessary.

Complete (Y/N) . . . . . .

3. Check the gas tightness.

Complete (Y/N). . . . . .

4. Check the flue installation. See flue section….

Complete (Y/N) . . . . . .

5. Fill the installation and complete flushing procedure. See page 26

Complete (Y/N) .....

6. Check return filter for debris and clean if necessary

Complete (Y/N) . . . . . .

7. Check the hydraulic water tightness.

Complete (Y/N) . . . . . .

8. Spin the pump.

Complete (Y/N) . . . . . .

9. Manually vent the heat exchanger or press Esc button

Complete (Y/N) . . . . . .

9. Change the language in the display (if necessary - page 30).

Complete (Y/N).....

10. Set the hour, and the date. See Page 30

Complete (Y/N) . . . . . .

11. Set the heating power. See Pages 28 & 30

Complete (Y/N) . . . . . .

12. Balance the central heating circuit. See Page 30

Complete (Y/N) . . . . . .

13. Check the operation of DHW.

Complete (Y/N) . . . . . .

14. Adjust DHW flow rate on the boiler.

Complete (Y/N) . . . . . .

15. Measure the gas inlet working pressure

Complete (Y/N).....

16. Check the boiler combustion.

Complete (Y/N).....

17. Gas rate the appliance.

Complete (Y/N) . . . . . .

18. Explain to the end user how to use the boiler timer and controls.

Complete (Y/N) . . . . . .

19. Fill in the log book. See pages 65 and 66.

Complete (Y/N) . . . . . .

Downloaded From www.Gas101.Co.Uk

Ignition procedure

Press the ON/OFF button on the control panel to switch on the boiler. The display shows:

The operating mode will be indicated by the three figures marked out on the diagram above.

The first figure indicates the operating mode:

0 XX - Stand-by, the scrolling text show the operation mode selected "summer" or "winter"
C XX - "C.Heating active" - Central heating request
c XX - "CH Pump Overrun" - Heating post-circulation
d XX - "DHW Active" - Domestic hot water request
h XX - "DHW Pump Overrun" hot water post-circulation
F XX - "Pump Frost Prot" - circulation pump anti-freeze protection enabled
- "Burn Frost Prot" - burner anti-freeze protection enabled

The second and third figures indicate:

- the flow temperature when no heating requests have been made
- the flow temperature in central heating mode
- the set temperature of the hot water in domestic hot water
- the flow temperature in anti-freeze mode.

The indication of certain functions:

P 1- "Purge in progress" = Deaeration cycle started

Electricity supply

- Check that the voltage and frequency of the electricity supply correspond to the data shown on the boiler data plate;
- Make sure that the earthing connection is efficient.

menu 2 - Boiler parameters
submenu 3 - **parameter 1**
Maximum Heating Power adjustment
submenu 2 - **parameter 0**
Soft light Ignition
submenu 3 - **parameter 5**
Heating ignition delay

First ignition

1. Make sure that:

- The gas valve is closed;
- The electrical connection has been properly carried out. Make sure that, in any case, the green/yellow earthing wire is connected to an efficient earthing system;
- Use a screwdriver to lift the cap on the automatic air relief valve;
- Switch on the boiler (by pressing the ON/OFF button) and use the Mode button to select the standby mode, where no hot water or heating requests are made.

- Start the deaeration cycle by pressing Esc for 5 seconds
The boiler will start a deaeration cycle lasting about 7 minutes (See below). If you need to stop it press Esc, alternatively it is possible to manually vent the heat exchanger.

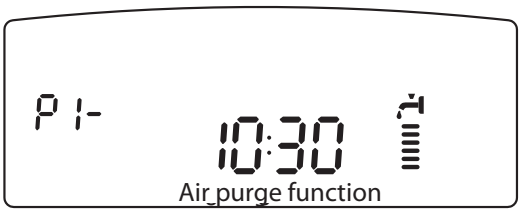

- At the end, check that the system is completely deaerated and, if not, repeat the procedure.
- Bleed the air from the radiators;
- The exhaust duct for combustion products should be suitable and free from any obstructions;
- Any necessary ventilation inlets in the room should be open (type B installation).

2. Open the gas cock and check the connection seals, including the boiler connection joints, making sure that the meter does not detect any passage of gas. Eliminate any leaks.

3. Start the boiler by selecting the heating or domestic hot water operation using the Mode button.

Description of Function

Deaeration cycle

During the filling stage or if there is excess air in the system, the deaeration cycle can be activated by holding the Esc button for 5 seconds. The boiler will start a cycle which lasts approximately 7 minutes. When this is complete the menu screen will be restored. The cycle may either be repeated, if necessary, or stopped by pressing Esc. Press the Esc button until the normal display screen is restored. **If the cycle is stopped be sure to manually vent the appliance.**

Maximum Heating Power adjustment

The maximum heating power can be adjusted to between the maximum power allowed by the boiler and the minimum power).

The display shows the value between 100% ("99" on the display) and 0% ("0") of this interval.

To check the maximum heating power, access menu 2/sub menu 3/parameter 1, check the value and, if necessary, modify it as indicated in the Gas Regulation table. (See page 31 for more details).

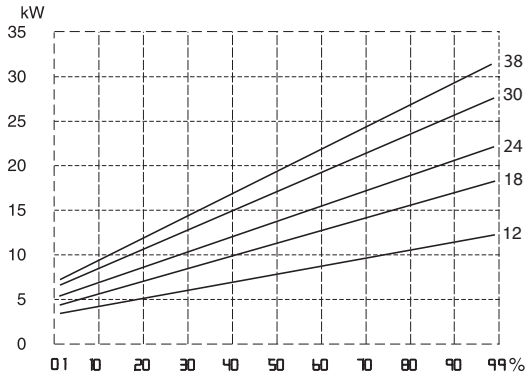

Checking slow ignition power

The soft light can be adjusted between the maximum power (shown on the display as "99", i.e. 100%) and the minimum power (shown on the display as "1", i.e. 1%).

To check the slow ignition power, access menu 2/sub menu 2/ parameter 0.

Downloaded From www.Gas101.Co.Uk

Heating ignition delay adjustment

This parameter – menu 2/sub menu 3/parameter 5 - can be used to manually (0) or automatically (1) set the delay time before the subsequent reignition of the burner after it has switched off on reaching the desired temperature in central heating mode.
By selecting manual, it is possible to set the delay in minutes using the successive parameter (menu 2/sub menu 3/parameter 6), to a time between 0 and 7 minutes.
Automatic selection means that the boiler will establish the delay time based on the set-point temperature.

gas setting								
		parameter	24 kW		30 kW		38 kW	
			G20	G31	G20	G31	G20	G31
lower Wobbe index (15°C, 1013 mbar) (MJ/m3)			45,67	70,69	45,67	70,69	45,67	70,69
minimum fan speed(%)		233	05	05	01	01	01	01
maximum central heating fan speed (%)		234	85	85	80	80	70	70
maximum D.H.W fan speed (%)		232	98	98	89	89	89	89
gas valve restrictor(ø)			NO	3,80	NO	4,50	NO	5,250
gas flow max/min (15°C, 1013 mbar) (nat - m3/h) (GPL - kg/h)	max D.H.W		2,65	1,94	3,17	2,33	4,02	2,95
	max C.H.		2,33	1,71	2,96	2,17	3,28	2,41
	min		0,58	0,43	0,69	0,50	0,79	0,58

Downloaded From www.Gas101.Co.Uk

Basic set up instructions - Timer and Range Rating Power

When the GENUS HE appliance is first turned on, the language (optional), central heating timer and output power must be set up.. The following instructions detail the basic set up procedure which will satisfy most standard boiler installations. For more complicated installations, i.e. outside temperature sensing etc. additional settings may need to be altered to match the performance to the system requirements.

To begin, switch the electrical supply to the boiler on, press the ON/OFF button on the control panel once to switch the appliance on.

Setting the language
Press the Menu/Ok button once (a flashing 0 appears on the left side of the display);

Press the Menu/Ok button again (00 appears on the display, the second 0 is flashing);

Press the Menu/Ok button again. The language appears at the bottom of the display.

Rotate the left hand control knob until the desired language is displayed;

Press Menu/Ok to save the setting;

'Value Saved' is displayed;

Press Esc twice to return to the normal display..

Setting the time, date, year and day of the week

Note: The date is in yyyy/mm/dd format.
Always use the left hand control knob to change settings.

Press the Menu/Ok button once (a flashing 0 appears on the left side of the display);

Press the Menu/Ok button again (00 appears on the display, the second 0 is flashing);

Rotate the control knob to change the display to 01. 'Time + Date' is displayed at the bottom of the screen;

Press the Menu/Ok button, the days of the week will appear on the screen and hours will flash;

Rotate the controll knob to select the hour of the day and then press the MODE button;

The minutes will flash. Rotate the control knob to select the minutes and press the MODE button;
The year will flash. Rotate the control knob to select the year and press the MODE button;

The month will flash. Rotate the control knob to select the month and press the MODE button;

The day of the month will flash. Rotate the control knob to select the day of the month and press the MODE button;

The day of the week will flash. Rotate the control knob to select the day of the week;

Press the Menu/Ok button to save the settings;

'Value saved' is displayed;

Press Esc twice to return to the normal display.

Setting the time clock (same timed programme every day)

Using pre- set time settings

Press the Menu/Ok button once (a flashing 0 appears on the left side of the display);

Rotate the control knob to change the 0 to 01. 'Set Timers' is displayed at the bottom of the screen;

Press the Menu/Ok button. 101 appears.

Rotate the control knob until 106 appears on the screen. 'Pre-set timers' appears at the bottom of the display.

Press the Menu/Ok button. It is now possible to select one of three options: Preset Timers 1, 2 or 3.

Monday to Sunday						
Preset Timer 1	**On 5:30**	**Off 22:00**				
Preset Timer 2	**On 6:00**	**Off 8:00**	**On 11:30**	**Off 13:00**	**On 17:00**	**Off 22:00**
Preset Timer 3	**On 6:00**	**Off 8:00**	**On 16:00**	**Off 22:00**		

To select one of the preset times, rotate the control knob which scrolls between the three options;

Press Menu/Ok to save the selected option;

'Value Saved' is displayed;

Press 'Esc' twice to return to the normal display.

To display the timer settings, the boiler MUST be in 'Winter' mode, i.e. the radiator symbol (to the left of the tap symbol) is displayed.

To activate the 'Winter' mode, press the MODE button once, until the radiator symbol is displayed;

To initiate the timer press the ◷ button, the timer display is shown at the top of the screen;

For constant heating ('Winter' mode only - see above) press the ◷ so the timer display disappears. The boiler will now operate the central heating constantly;

To return to the timer function, press the ◷ button. The timer display will reappear.

Selecting your own times options (Monday to Sunday)

The time clock is initially set with all time segments selected for the 24 hour period i.e. constant operation.

If a pre-set time pattern has been selected, this will be displayed.

Downloaded From www.Gas101.Co.Uk

The following instructions assume the full 24 hour time period has been selected, i.e. constant operation. To set the on/off times for the boiler the relevant 'OFF' periods must be set as follows:

Press the Menu/Ok button once (a flashing 0 appears on the left side of the display)

Rotate the control knob to change 0 to 1. 'Set Timers' appears at the bottom of the display;

Press Menu/Ok button 101 appears on the screen. Monday - Sunday appears at the bottom of the display;

Press the Menu/Ok button, the clock display appears and 'Move Cursor' appears at the bottom of the display'

All time periods are selected (highlighted) for boiler operation;

'Move Cursor' appears at the bottom of the display;

Press the MODE button. 'ON Period' appears at the bottom of the display;

Press the MODE button. 'OFF Period' appears at the bottom of the display;

Rotate the control knob to move the cursor to the START of the desired ON Period. As the knob is rotated the time periods will become deselected i.e. they are no longer highlighted;

Press the MODE button. 'Move Cursor' appears at the bottom of the display'

Press the MODE button. 'ON Period' appears at the bottom of the display;

Rotate the control knob to select the ON Period, i.e. the times heat is required;

As the ON Period is selected, the 15 minute segments will remain highlighted on the display/ Cotinue until the required time period is highlighted;

Press the MODE button to select the next OFF Period;

Rotate the control knob to move the cursor to the START of the desired ON Period. As the knob is rotated the time periods will become deselected i.e. they are no longer highlighted;

Press the MODE button. 'Move Cursor' appears at the bottom of the display'

Press the MODE button. 'ON Period' appears at the bottom of the display;

Rotate the control knob to select the ON Period, i.e. the times heat is required;

As the ON Period is selected, the 15 minute segments will remain highlighted on the display/ Cotinue until the required time period is highlighted;

Continue untill all required time periods are selected/ deselected;

Ensure any time periods after the last 'ON Period' are deselected;

When all selections have been made, press the Menu/Ok button to save the settings;

'Value Saved' is displayed;

Press 'Esc' twice to return to the normal display.

To display the timer settings, the boiler MUST be in "Winter' mode, i.e. the radiator symbol (to the top left of the tap symbol) is displayed.

To activate 'Winter' mode, press the MODE button once, until the radiator symbol is displayed

To initiate the timer press the ◷ button, the timer display is shown at the top of the screen;

For constant heating ('Winter' mode only - see above) press the ◷ button so the timer display disappears. The boiler will now operate the central heating constantly.

To return to the timer function, press the ◷ button. The timer display will reappear.

Range rating the power of the boiler to suit the central heating load

When commissioning the appliance it is necessary to match the output of the boiler to that of the installed central heating system.

Press the Menu/Ok button once (a flashing 0 appears on the left side of the display);

Rotate the control knob to change the 0 to 2. 'Boiler Parameters' appears at the bottom of the display;

Press the Men/Ok button. 21 appears (flashing 1) with 'Service Code' at the bottom of the display;

Press the Menu/Ok button, 222/cod flashes. Rotate the control knob to show 234.

Press Menu/Ok

Press the Menu/Ok button. 22 appears (2nd 2 flashing) with 'General' at the bottom of the display.

Rotate the control knob to change 22 to 23 'central heating - 1' appears at the bottom of the display;

Press the Menu/Ok button, 231 appears (flashing 1) 'max CH adjustable' appears at the bottom of the display;

Press the Menu/Ok button, 60 appears (231 flashing intermittently)'

60 is the % output of the boiler in relation to its maximum output. Using the graph on page 28 set the correct % value for the output required;

Rotate the control knob to either increase or decrease the required percentage;

Press Menu/Ok to save the settings

'Value Saved' is displayed;

Press the Esc button three times to return to the normal display.

Downloaded From www.Gas101.Co.Uk

Test function and combustion analysis
The boiler has two pressure taps to measure the combustion gas temperature, the combustive air and the concentrations of O2 and CO2 on the outside of the flue gas header.
to access these pressure taps, unscrew the screw which holds the blanking cover and its seal together.

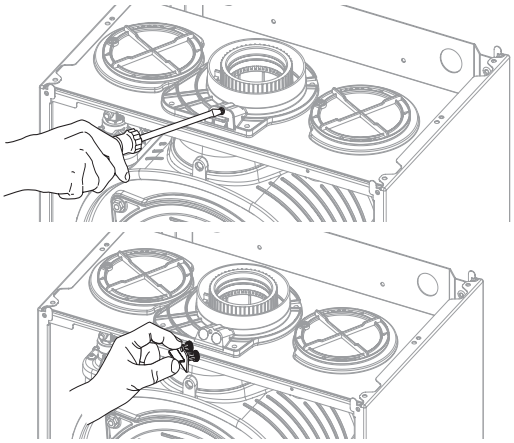

Checking the gas setting
To carry out analyses of combustion, the test function must be activated.

Test function
The PCB allows the appliance to be forced to minimum or maximum power.
Activate the test function by pressing the **Reset** button for 5 seconds, the boiler switches to maximum heating power, the following appears on the display:

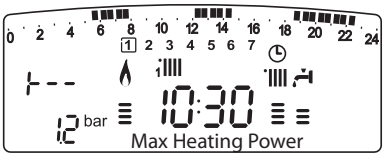

To select the function at maximum domestic hot water, turn the encoder, the following appears on the display:

To select the function at minimum domestic hot water, turn the encoder, the following appears on the display:

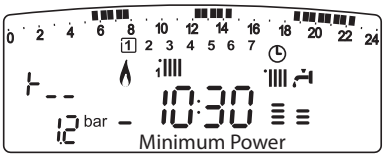

The function is automatically deactivated after 10 minutes or by pressing the **Reset** button.
Note: the appliance can be forced to minimum or maximum power from menu 7 (see the section on the display - setting - diagnostics menu).
WARNING! By activating the pigging function, the temperature of the water sent to the installation is limited to 88°C; caution is therefore required with regard to low-temperature installations.

Maximum gas flow combustion analysis
Activate the test function at the maximum heating power t--
Wait for the boiler to stabilise before carrying out the combustion analyses. Check the CO2 value according to the table below.
Important: do not remove silencer **20**

Maximum or minimum CO_2	24 kW	30 kW	38 kW
	CO_2 (%)		
G20	9.0 ± 0.2	9.0 ± 0.2	9.4 ± 0.2
G31	10.7 ± 0.2	10.0 ± 0.2	10.6 ± 0.2

N.B.: when the front combustion chamber panel is open, the CO2 value drops by 0.3%.
If the values taken differ from the table, adjust the gas valve following the procedure described below.

Adjust the CO2 content to **± 0.2** by turning setting screw **50** (**2.5 mm allen key**)
- tighten to lower the CO2 value
- unscrew to increase the CO2 value

Set the content by turning the screw about a 1/4 of a turn then wait after each change for approximately 1 minute for the CO2 value to stabilise, then repeat.

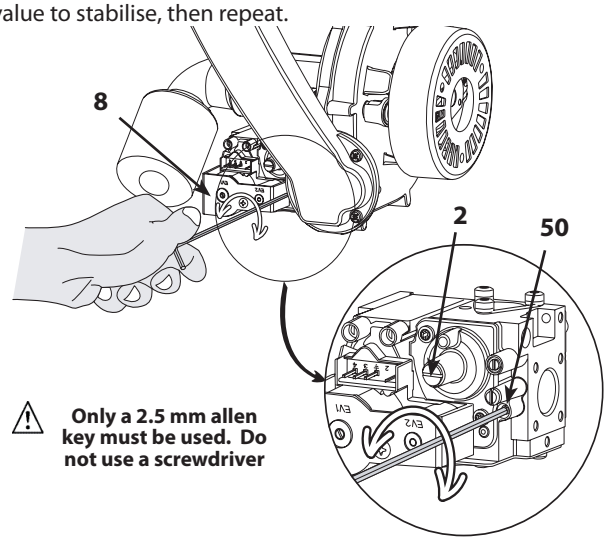

Minimum gas flow combustion analysis
Activate the cleaning function at minimum power in either heating or domestic hot water production.
Wait for the boiler to stabilise before carrying out the combustion analyses. Check the CO2 value according to the table above.
Important: do not remove silencer **20**
N.B.: when the combustion chamber is open, the CO2 value drops by 0.3%.
If the values taken differ from the table, adjust the gas valve following the procedure described below.

To adjust the CO2 value, remove cap **2**, adjust the CO2 content to **± 0.2** by turning setting screw **51** (**4 mm allen key**)
- unscrew to lower the CO2 value
- tighten to increase the CO2 value

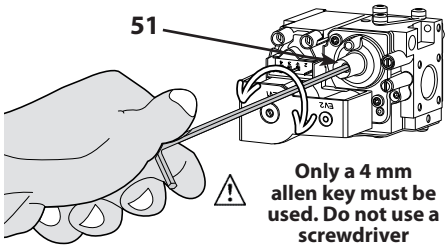

Set the content by turning the screw about a 1/4 of a turn then wait after each change for approximately 1 minute for the CO2 value to stabilise, then repeat.
Once the settings and analyses are complete, exit test mode, and reposition the blanking cover and its seal correctly.

Downloaded From www.Gas101.Co.Uk

AUTO function

This is a function which enables the boiler to automatically adapt its operation routine (the temperature of the heating elements) in line with the outdoor conditions, in order to achieve and maintain the requested room temperature conditions.
Depending on the peripheral units connected and the number of zones controlled, the boiler adjusts its flow temperature automatically.
The various corresponding parameters should therefore be set (see adjustments menu).
To activate the function, press the AUTO button.

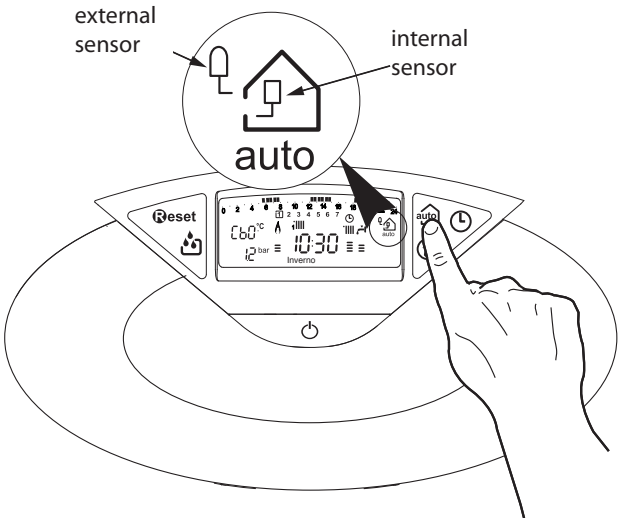

Example 1:
SINGLE ZONE SYSTEM (HIGH-TEMPERATURE) WITH ON/OFF ROOM THERMOSTAT:
In this case the following parameters must be set:
4 21 - Activation of temperature adjustment using sensors
- Select 1 = Basic temperature adjustment
2 44 - Boost Time (optional)
The wait time for the flow temperature increase in steps of 4°C may be set. The value varies according to the type of system and installation.
If the Boost Time value = 00 the function is not activated.

Example 2:
SINGLE ZONE SYSTEM (HIGH-TEMPERATURE) WITH ON/OFF ROOM THERMOSTAT + OUTDOOR SENSOR:
In this case the following parameters must be set:
4 21 - Activation of temperature adjustment using sensors
- Select 3 = outdoor sensor only
4 22 - Temperature adjustment curve selection
- Select the relevant curve according to the type of system, installation, heat insulation used in the building, etc.
4 23 - Perform a parallel curve shift if necessary, increasing or decreasing the set-point temperature (this may also be modified by the user, using the heating temperature adjustment knob, which, with the Auto function activated, is used to shift the curve in a parallel manner).

Example 3:
SINGLE ZONE SYSTEM (HIGH-TEMPERATURE) WITH REMOCON REMOTE CONTROL + OUTDOOR SENSOR
In this case the following parameters must be set:
4 21 - Activation of temperature adjustment using sensors
- select 4 = outdoor sensor + room sensor
4 22 - Temperature adjustment curve selection
- Select the relevant curve according to the type of system, installation, heat insulation used in the building, etc
4 23 - Perform a parallel curve shift if necessary, increasing or decreasing the set-point temperature. (This may also be changed by the user by the encoder which, with the Auto function activated, is used to shift the curve in a parallel manner.)
4 24 - Influence of room sensor
- used to adjust the influence the room temperature has on the calculation of the set-point flow temperature (20 = maximum, 0 = minimum).

Note: See page 35 for details on accessing menus.

Downloaded From www.Gas101.Co.Uk

Boiler protection devices

The boiler is protected from malfunctioning by means of internal checks performed by the electronic microprocessor P.C.B., which stops the boiler from operating if necessary.

In the event of the boiler being shut off in this manner, a code appears on the display which refers to the type of shut-off and the reason behind it.

There are two types of shut-off:

Safety shut-off

This type of error is "volatile", which means that the boiler starts up again automatically as soon as the problem which caused the shut-off is removed; the error is indicated by the symbol which appears on the display and the error code.

In fact, soon as the cause of the shut-off disappears, the boiler starts up again and continues to operate normally.

In the event of error **1 08** - **Shut-off due to insufficient water pressure** inside the heating circuit - the boiler will perform a safety shut-off.

You can increase the pressure by filling the heating circuit.

In this case or if the re-balancing request is performed on a frequent basis, switch the boiler off, turn the external electric switch to the OFF position, shut off the gas cock and contact a qualified technician to check for any leaks of water.

Shutdown

This type of error is "non-volatile", which means that it is not removed automatically. To restore normal operation press the **Reset** button on the control panel.

The first figure of the error code (e.g. 1 01) indicates within which operational assembly the error occurred.

1 - Primary Circuit
2 - Domestic Hot Water Circuit
3 - Internal Electronic Part
4 - External Electronic Part
5 - Ignition and Detection
6 - Air inlet - flue gas outlet
7 - Multi-zone Heating

Malfunction warning

This warning is shown by the display in the following format:

5 P1 = FIRST IGNITION ATTEMPT UNSUCCESSFUL

the first figure indicating the operational assembly is followed by a P (warning) and the code relating to the specific warning.

Important

If this shutdown occurs frequently, contact an authorised Technical Service Centre for assistance. For safety reasons, the boiler will permit a maximum of 5 resets in 15 minutes (5 presses of the RESET button); at the 6th attempt within this 15-minute period the boiler will shut down and may only be operated again after the electricity supply has been disconnected. If the shutdown is occasional or an isolated event, this is not a problem.

Anti-frost Device.

The anti-frost function acts on the central heating flow temperature probe, independently from other regulations, when the electrical supply is turned on.

If the primary circuit temperature is between 3°C and 8°C the pump will run (with the diverter valve switching between central heating and hot water every 1 minute) until the temperature reaches > 9°C.

If the flow temperature remains between 3°C and 8°C the pump will continue to run for a maximum of 20 minutes unless a temperature above > 9°C is detected in the central heating flow, after this the the burner will fire (heating position) until a temperature of > 30°C is detected.

If the central heating flow temperature is < 3°C, the burner will fire (heating position) at minimum power until the temperature reaches > 30°C, the burner will go out.

If lockout is caused by overheat the burner will not fire but the pump will continue to run (heating position).

The anti-frost device activates only when (with the boiler operating correctly):

- the system pressure is correct;
- the boiler is electrically powered;
- there is a supply of gas.

Table summarising error codes

Display	Description	
Central Heating circuit		
1 01	Overheat	
1 02	Pressure Sens Error	
1 03	Insufficient circulation	
1 04		
1 05		
1 06		
1 07		
1 10	C.H. Flow temp. probe circuit open / short circuit	
1 08	Insufficient water (request filling)	
1 12	C.H. Return temp. probe circuit open / short circuit	
1 14	External sensor circuit open / short circuit	
1 16	Floor Thermostat contact open	
1 18	Heating delevery probe problem	
1 P1	Insufficient circulation indication	
1 P2		
1 P3		
D.H.W. circuit		
2 01	D.H.W. temp. probe circuit open / short circuit	
2 02	Bottom storage temperature probe open / short circuit	Solar kit (optional)
2 04	Solar collector temperature probe open / short circuit	Solar kit (optional)
2 07	Solar collector overheating	Solar kit (optional)
2 08	Collector frost protection temperature	Solar kit (optional)
Internal P.C.B.'s		
3 01	EEPROM error	
3 02	Comunication error	
3 03	Main P.C.B. error	
3 04	Too many (> 5) resets in 15 minutes	
3 05	Main P.C.B. error	
3 06	Main P.C.B. error	
3 07	Main P.C.B. error	
External P.C.B.'s		
4 07	Room sensor circuit open 7 short circuit	
Ignition and Detecion		
5 01	No flame detected	
5 02	Flame detected with gas valve closed	
5 04	Flame lift	
5 P1	1st Ignition Failed	
5 P2	2nd Ignition Failed	
5 P3	Flame cut-off	
Air Inlet / Flue gas outlet		
6 04	Insufficient fan speed	
6 10	Thermofuse open	
Multi-zone Heating (Heating Zone Modules - optional)		
7 01	Zone 2 outgoing sensor defective	
7 02	Zone 2 return sensor defective	
7 03	Zone 3 outgoing sensor defective	
7 04	Zone 3 return sensor defective	
7 05	Hydraulic separation sensor defective	
7 06	Zone 2 overheating	
7 07	Zone 3 overheating	

Downloaded From www.Gas101.Co.Uk

Accessing the settings - adjustment - problem identification menus

The boiler can be used to manage the heating and domestic hot water production system in its entirety.

Navigation within the menus enables the boiler system + connected peripheral units to be customised, optimising operation for maximum comfort and maximum saving. It also provides important information relating to the efficient operation of the boiler.

The following menus are available:

0	**Time-Date-Language**		**See manual user's**
0	0	Set Dispaly Language	
0	1	Set Time-Date	
0	2	British Summer Time	
1	**Set Timer**		**See manual user's**
2	**Boiler Parameter**		
2	1	Service code (234)	
2	2	General setting	
2	3	C.H. Parameters - Part 1	
2	4	C.H. Parameters - Part 1	
2	5	Domestic Hot Water	
2	9	Menù 2 Reset to factory setting	
3	**Solar & Storage**		
3	0	General setting	
3	1	Service code (234)	
3	2	Special setting	
4	**Zone 1 Parameters**		
4	0	Set-point Zone1	
4	1	Service code (234)	
4	2	Zone 1 Setting	
4	3	Diagnostics	
4	4	Zone device mangement	
5	**Zone 2 Parameters**		
5	0	Set-point Zone2	
5	1	Service code (234)	
5	2	Zone 2 Setting	
5	3	Diagnostics	
5	4	Zone device mangement	
5	5	Multizone	
7	**Test & Utilities**		
8	**Service Parameter**		
8	1	Service code (234)	
8	2	Boiler	
8	3	Boiler Temperature	
8	4	Solar & Storage	
8	5	Service	
8	6	Statistics	
8	7	E@sy - NOT ACTIVE	
8	8	Error History	

The parameters relating to each individual menu are listed in the following pages.

The various parameters can be accessed and modified using the Menu/Ok button and the encoder (see fig. below). The description of the menus and of each individual parameter will be shown on the display.

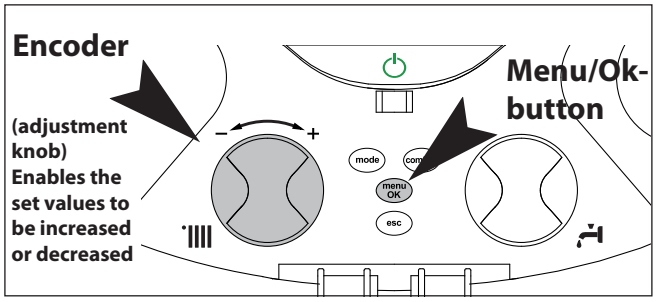

On the display, the information relating to the menus and to the individual parameters are indicated by the figures and by the scrolling text shown in the figure below.

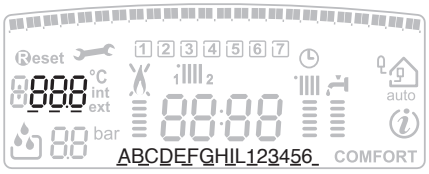

To access the Menus, open the cover and proceed as follows:

1. Press the Menu/Ok button; the first figure 000 will flash on the display.
2. Turn the encoder to select a menu; the text on the display will indicate the title of the pre-selected menu, for example: "200 - Boiler parameters".
3. Press the Menu/Ok button; the first two figures on the display will flash and the access code will flash, e.g. "210 - Access code".
   Caution! The menus reserved for qualified technicians may only be accessed after setting the access code.
4. Press the Menu/Ok button; 222 will appear on the display unit.
5. Turn the encoder in a clockwise direction to select code 234 - Correct code.
6. Press the Menu/Ok button to select the sub menu; the first two figures will flash, e.g. "220".
7. Turn the encoder to select a sub menu; the text on the display will indicate the title of the pre-selected sub menu, for example: "230 - Heating - Part 1".
8. Press the Menu/Ok button to access the sub menu parameters; the three figures will flash, for example: "230".
9. Turn the encoder to select a parameter; the text on the display will indicate the title of the pre-selected parameter, for example: "231 - Max. Adjustable Heating Power".
10. Press the Menu/Ok button to access the parameter; the display will indicate the value, e.g " 70".
    Note: The parameter value will be displayed for 20 seconds, then will begin to flash in alternation with the parameter, e.g. " 70 > 231.
11. Turn the encoder to select the new value, e.g. " 75".
12. Press Menu/Ok to save the change or press Esc to exit without saving.

To exit, press the Esc button until the normal display screen is restored.

For menus which do not require the access code, it is possible to pass directly from the menu to the sub menu.

Downloaded From www.Gas101.Co.Uk

menu	sub-menu	parameter	description	value	default setting	
0	**SETTING LANGUAGE - DATE - TIME**					**See pages 30 and 31**
1	**PROGRAMMING TIMER**					**See pages 30 and 31**
2	**BOILER PARAMETER SETTING**					
2	**1**		Entering access code		222	Turn the encoder clockwise to select 234 and press the MENU button
2	**2**		**BOILER GENERAL SETTING**			
2	**2**	**0**	Slow ignition	0 to 99	60	
2	2	1	Minimum ambient temperature for antifreeze activation	from 2 to 10 °C	5	Activated only with the modulating peripheral device (optional)
2	2	2	NOT PRESENT			
2	**2**	**3**	Underfloor thermostat or zone 2 ambient thermostat selection	0 = Floor safety thermostat 1 = Zone 2 ambient thermostat	0	
2	**2**	**4**	Mechanical timer connection authorisation	0 = Absent 1 = Present	0	To be modified if mechanical timer is present (optional)
2	2	5	Heating ignition delay	0 = Deactivated 1 = 10 seconds 2 = 90 seconds 3 = 210 seconds	0	Activated only with zone 2 interface (optional)
2	2	6	NOT PRESENT			
2	2	7	NOT PRESENT			
2	2	8	Boiler Version CANNOT BE MODIFIED	0 to 5	0	RESERVED FOR TECHNICAL ASSISTANCE Only if the PCB is changed
2	**3**		**BOILER PARAMETER - PART 1**			
2	3	0	NOT PRESENT			
2	**3**	**1**	Maximum heating power setting	0 to 99		See Page 31
2	3	2	Domestic hot water maximum RPM percentage CANNOT BE MODIFIED	0 to 99		RESERVED FOR TECHNICAL ASSISTANCE Only if the gas or PCB is changed see "gas setting" table
2	3	3	Minimum RPM percentage CANNOT BE MODIFIED	0 to 99		
2	3	4	Heating maximum RPM percentage CANNOT BE MODIFIED	0 to 99		
2	**3**	**5**	Selection of ignition delay type when heating	0 = Manual 1 = automatic	1	see section on "gas setting". Page 29.
2	**3**	**6**	Ignition delay when heating timer setting	from 0 to 7 minutes	3	
2	**3**	**7**	Post-circulation when heating	from 0 to 15 minutes or continuous	3	
2	**3**	**8**	Circulation pump operating type	0 = Low Speed 1 = High Speed 2 = Modulating	2	
2	**3**	**9**	Setting the Delta T Circulation pump modulation	from 10 to 30 °C	20	to be set with operation of the circulation pump in modulating mode
			These parameters allow the flow and backflow temperature difference to be set, which determines whether the circulation pump switches from low to high speed **E.g.:** param. 239 = 20 and ΔT > 20°C- the circulation pump runs at high speed. If ΔT < 20 - 2°C the circulation pump runs at low speed. The minimum waiting time for changing speed is 5 minutes.			

Downloaded From www.Gas101.Co.Uk

menu	sub-menu	parameter	description	value	default setting	
2	4		**BOILER PARAMETER - PART 2**			
2	4	0	NOT PRESENT			
2	4	1	NOT PRESENT			
2	4	2	NOT PRESENT			
2	4	3	Post-ventilation after heating request	0 = OFF 1 = ON	0	
2	4	4	Time delay after heating temperature increase	from 0 to 60 minutes	16	activated only with thermostat On/Off and heating control activated (parameter 421 or 521 = 01
			This parameter allows the time delay to be set before automatic increase of the flow temperature calculated in increments of 4°C (max 12°C). If this parameter retains the value 00, this function is not active.			
2	4	5	NOT PRESENT			
2	4	6	NOT PRESENT			
2	4	7	Device indicator for heating circuit pressure	0 = temperature sensor only 1 = pressure switch at minimum 2 = pressure sensor	1	RESERVED FOR TECHNICAL ASSISTANCE Only if the PCB is changed
2	4	8	NOT PRESENT			
2	5		**DOMESTIC HOT WATER PARAMETER**			
2	5	0	COMFORT function	0 = deactivated 1 = timed 2 = always on	0	Timer = activated for 30 minutes after domestic hot water draw-off
			The appliance allows the hot water heating comfort to be increased via the "COMFORT" function. This function keeps the secondary exchanger temperature stable when the boiler is not in use. When the function is active, the display shows COMFORT Note: this function can be activated and deactivated by pressing the COMFORT button			
2	5	1	Comfort Anti-cycling Time	from 0 to 120 minutes	0	
2	5	2	Hot water flow delay	from 5 to 200 (0.5 to 20 seconds)	5	Anti "water hammering"
2	5	3	Extinction of the burner in domestic hot water	0 = anti-scale (stop at > 67°C) 1 = + 4°C /setting	0	
2	5	4	Post-circulation and post-ventilation after a domestic hot water draw-off	0 = OFF 1 = ON	0	
				OFF = 3 minutes post-circulation and post-ventilation after domestic hot water draw-off if the boiler temperature measured requires it. ON = always on for 3 minutes post-circulation and post-ventilation after domestic hot water draw-off.		
2	5	5	Domestic hot water timer	from 0 to 60 minutes	0	
2	9		**RESET MENU 2**			
2	9	0	Automatically resetting to the default setting in menu 2	Reset OK = yes ESC = no		To reset all default parameter settings, press the MENU button

Downloaded From www.Gas101.Co.Uk

menu	sub-menu	Parameter	Description	value	default setting	
3	**BOILER WITH TANK (INTERNAL OR EXTERNAL) AND SOLAR APPLIANCE CONNECTION**					
3	**0**	**GENERAL SETTING**				
3	0	0	NOT ACTIVATED			
3	0	1	NOT ACTIVATED			
3	0	2	NOT ACTIVATED			
3	**1**		Entering access code		222	Turn the encoder clockwise to select 234 and press the MENU button
3	**2**	**SPECIAL SETTING**				
3	**2**	**0**	Anti-legionella function	0=OFF - 1 = ON		
			This function avoids the formation of the legionella bacterium wich sometimes develops in pipes and water tanks where the temperature is included between 20 and 40°C. If the storage temperature remains more than 100 hours less than 59°C and the function is enable, the boiler is light aan and the storage water is warmed up to 65°C during 30 minutes.			
3	2	1	NOT ACTIVATED			**Enable only with Clip-In solar connected (option)**
3	2	2	NOT ACTIVATED			
3	**2**	**3**	Collector delta temp pump ON	from 0 to 30°C	8	
3	**2**	**4**	Collector delta temp pump OFF	from 0 to 30°C	2	
3	**2**	**5**	Minimum collector temp pump ON	from 10 to 90°C	30	
2	**2**	**6**	Collector kick	ON or OFF	OFF	
3	**2**	**7**	Recooling function	ON or OFF	OFF	
3	2	8	NOT ACTIVATED			
3	**2**	**9**	Collector frost protection temperature	from -20 to +5°C	-20	

Downloaded From www.Gas101.Co.Uk

menu	sub-menu	parameter	description	value	default setting	
4	**ZONE 1 PARAMETER**					
4	**0**	**ZONE 1 TEMPERATURE SETTING**				
4	**0**	**0**	Zone 1 comfort temperature setting "Comfort ambience T"	from 10 to 30 °C	19	Activated only with the modulating device connected (option)
4	**0**	**1**	Zone 1 reduced temperature setting "Reduced ambience T"	from 10 to 30 °C	16	
4	**0**	**2**	Heating fixed temperature setting "Heating fixed temp"	from 20 to 82 °C	70	Activated only with temperature control and fixed temperature
4	**1**		Entering access code		222	turn the encoder clockwise to select 234 and press the MENU/OK button
4	**2**	**ZONE 1 SETTING**				
4	**2**	**0**	Heating appliance temperature value setting	0 = from 20 to 45°C (low temperature) 1 = from 35 to 85°C (high temperature)	1	select in the appliance type base
4	**2**	**1**	Basic heating control type selection type depending on the peripheral devices connected	0 = fixed flow temperature 1 = device On/Off 2 = ambient sensor only 3 = external sensor only 4 = ambient sensor + external sensor	1	To activate heating control, press the AUTO button. The display lights up the AUTO symbol, indicating the peripheral device connected (if present)
4	**2**	**2**	Slope	0_2 to 3_5	1_5	
			If the external sensor is used, the boiler calculates the most suitable heating flow temperature taking the external temperature and the type of appliance into account. The type of curve must be chosen according to the type of appliance radiator and the heat losses present in the building.	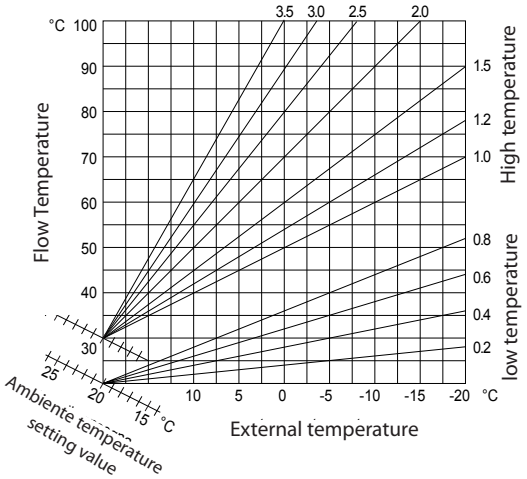		
4	**2**	**3**	Parallel shift	- 20 to + 20	0	
			To adapt the thermal curve to the appliance requirements, it is possible to perform a parallel shift of the curve in order to alter the calculated flow temperature and therefore the ambient temperature. The shift value between - 20 and + 20 is shown on the display. Each level corresponds to a 1°C increase in the flow temperature in relation to the initial setting.			
4	**2**	**4**	Compensation	0 to + 20	20	
				if setting = 0, the temperature taken from the ambient sensor does not affect the calculation of the setting. If setting = 20, the temperature taken has maximum influence on the setting.		
4	**2**	**5**	Zone 1 heating maximum temperature setting	35 to + 82°C	82	if parameter 420 = 1
				20 to + 45°C	45	if parameter 420 = 0
4	**2**	**6**	Zone 1 heating minimum temperature setting	35 to + 82°C	35	if parameter 420 = 1
				20 to + 45°C	20	if parameter 420 = 0
4	**3**	**DIAGNOSTICS**				display only
4	**3**	**0**	Zone 1 room temperature			Activated only with the modulating device connected (option)
4	**3**	**1**	Zone 1 set temperature			
4	**3**	**2**	Zone 1 heat request	0=OFF 1=ON		
4	**3**	**3**	Pump status	0=OFF 1=ON		Active only with MGZ/MCM kit
4	**4**	**ZONE DEVICE MANAGEMENT**				
4	**4**	**0**	Pump control	0=OFF 1=ON		Active only with MGZ/MCM kit

Downloaded From www.Gas101.Co.Uk

menu	sub-menu	parameter	description	value	default setting	
5	**ZONE 2 PARAMETER**					
5	**0**	**ZONE 2 TEMPERATURE SETTING**				
5	**0**	**0**	Zone 2 comfort temperature setting "Comfort ambience T"	from 10 to 30 °C	19	Activated only with the modulating device connected (option)
5	**0**	**1**	Zone 2 reduced temperature setting "Reduced ambience T"	from 10 to 30 °C	16	
5	**0**	**2**	Heating fixed temperature setting "Heating fixed temp"	from 20 to 82 °C	70	Activated only with temperature control and fixed temperature
5	**1**		Entering access code		222	turn the encoder clockwise to select 234 and press the MENU/OK button
5	**2**	**ZONE 2 SETTING**				
5	**2**	**0**	Heating appliance temperature value setting	0 = from 20 to 45°C (low temperature) 1 = from 35 to 85°C (high temperature)	1	select in the appliance type base
5	**2**	**1**	Basic heating control type selection type depending on the peripheral devices connected	0 = fixed flow temperature 1 = device On/Off 2 = ambient sensor only 3 = external sensor only 4 = ambient sensor + external sensor	0	To activate heating control, press the AUTO button. The display lights up the AUTO symbol, indicating the peripheral device connected (if present)
5	**2**	**2**	Slope	0_2 to 3_5	1_5	
			If the external sensor is used, the boiler calculates the most suitable heating flow temperature taking the external temperature and the type of appliance into account. The type of curve must be chosen according to the type of appliance radiator and the heat losses present in the building.			see graph on the previous page
5	**2**	**3**	Parallel shift	- 20 to + 20	0	
			To adapt the thermal curve to the appliance requirements, it is possible to perform a parallel shift of the curve in order to alter the calculated flow temperature and therefore the ambient temperature. The shift value between - 20 and + 20 is shown on the display. Each level corresponds to a 1°C increase in the flow temperature in relation to the initial setting.			
5	**2**	**4**	Compensation	0 to + 20	20	
				if setting = 0, the temperature taken from the ambient sensor does not affect the calculation of the setting. If setting = 20, the temperature taken has maximum influence on the setting.		
5	**2**	**5**	Zone 2 heating maximum temperature setting	35 to + 82°C	82	if parameter 420 = 1
				20 to + 45°C	45	if parameter 420 = 0
5	**2**	**6**	Zone 2 heating minimum temperature setting	35 to + 82°C	35	if parameter 420 = 1
				20 to + 45°C	20	if parameter 420 = 0
5	**3**	**DIAGNOSTICS**				
5	**3**	**0**	Zone 2 room temperature			Activated only with the modulating device connected (option)
5	**3**	**1**	Heating flow outlet temperature			Active only with MGZ/MCM kit
5	**3**	**2**	Heating return temperature			
5	**3**	**3**	Zone 2 set temperature			Activated only with the modulating device connected (option)
5	**3**	**4**	Zone 2 heat request	0=OFF 1=ON		
5	**3**	**5**	Zone 2 Pump status	0=OFF 1=ON		Active only with MGZ/MCM kit
5	**4**	**ZONE DEVICE MANAGEMENT**				
5	**4**	**0**	Operation mode test	0=OFF 1=ON 2=manual		Active only with MGZ/MCM kit
5	**4**	**1**	Valve control	0=OFF 1=Open 2=Close		
5	**4**	**2**	Pump control	0=OFF 1=ON		
5	**5**	**MULTIZONE**				
5	**5**	**0**	Heating collector temperature	0 to 120°C	0	Active only with MGZ/MCM kit
5	**5**	**1**	Heating collector flow outlet temperature offset	0 to + 40°C	5	

Downloaded From www.Gas101.Co.Uk

menu	sub-menu	parameter	description	value	default setting	
7	**TEST & UTILITIES**					
7	**0**	**0**	Function test - Cleaning turn the encoder to select the operating mode	t-- = funct. at Max heating power t-- = funct. at Max DHW power t_ = funct. at Min power	t--	activation can also be obtained by pressing the **Reset** button for 10 seconds. The function is deactivated after 10 minutes or by pressing **Reset**
7	**0**	**1**	Bleed cycle	press **Menu**		
8	**PARAMETER FOR TECHNICAL ASSISTANCE**					
8	**1**		Entering access code		222	turn the encoder clockwise to select 234 and press the MENU button
8	**2**	**BOILER**				
8	**2**	**0**	NOT PRESENT			
8	**2**	**1**	Fan status	ON or OFF		
8	**2**	**2**	Fan speed (x100) rpm			
8	**2**	**3**	Circulation pump speed	OFF - LS - HS		
8	**2**	**4**	Distribution valve position	Domestic hot water - Heating		
8	**2**	**5**	Water flow rate (l/min)			
8	**2**	**6**	NOT PRESENT			
8	**3**	**BOILER TEMPERATURE**				
8	**3**	**0**	Heating adjustment temperature (°C)			
8	**3**	**1**	Heating flow temperature (in °C)			
8	**3**	**2**	Heating backflow temperature (in °C)			
8	**3**	**3**	Domestic hot water temperature (in °C)			
8	**4**	**SOLAR APPLIANCE AND TANK**				
8	**4**	**0**	Accumulated measured temperature			activated only with the solar kit connected or external tank
8	**4**	**1**	Solar collector temperature			
8	**4**	**2**	Solar appliance water input temperature			
8	**4**	**3**	Solar appliance low tank sensor temperature			
8	**4**	**4**	Layered tank set temperature			
8	**4**	**5**	Total circulation pump operating time delay for solar appliance			
8	**4**	**6**	Total solar collector overheating time delay			
8	**5**	**SERVICE - TECHNICAL ASSISTANCE**				
8	**5**	**0**	Time remaining before next service setting	0 to 60 (months)	24	once the parameter is set, the boiler will show the user the interval before the next service
8	**5**	**1**	Service warning authorisation	ON or OFF	OFF	once the service has been performed, set the parameter to clear the warning
8	**5**	**2**	Clearing the service warning	Reset OK = yes ESC = no		
8	**5**	**3**	NOT PRESENT			
8	**5**	**4**	PCB hardware version			
8	**5**	**5**	PCB software version			
8	**5**	**6**	PUS peripheral device interface software version			

Downloaded From www.Gas101.Co.Uk

menu	sub-menu	Parameter	Description	value	default setting	
8	6	**STATISTICS**				
8	6	0	Number of hours burner operating in heater mode (xxh/10)			
8	6	1	Number of hours burner operating in hot water mode (xxh/10)			
8	6	2	Number of flame separations (nr/10)			
8	6	3	Number of ignition cycles (nr/10)			
8	6	4	Number of filling cycles performed			
8	6	5	Average length of heating request (minutes)			
8	7	**E@SY HOTLINE NOT ACTIVE**				
8	7	0				
8	7	1				
8	8	**ERROR LIST**				
8	8	0	10 last errors	from E00 to E99		
			This parameter allows the last 10 boiler errors flagged to be displayed, indicating the day, month and year. When the parameter is accessed, the errors are displayed listed from E00 to E99. For each error, the following sequence is displayed: E00 - error number 108 - error code A15 - A = day on which error E00 occurred - Only with CLIMA MANAGER connected B09 - B = month during which error E00 occurred Only with CLIMA MANAGER connected C06 - C = year during which error E00 occurred Only with CLIMA MANAGER connected			
8	8	1	Error list reset	Reset OK = yes ESC = no		
8	9	**DATA - ASSISTANCE CENTRE**				
8	9	0	Enter the name of the assistance centre - it will be displayed if there is a fault which cannot be unlocked with the Reset button			
			"Assistance Centre Name" appears on the display, press the MENU button and start entering the letters by turning the encoder. To insert each letter, press the MODE button to confirm it and move on to the next letter. Enter the number of the assistance centre - it will be displayed if there is a fault which cannot be unlocked with the Reset button "Assistance Centre Number" appears on the display, press the MENU button and start entering the digits by turning the encoder. To insert each digit, press the MODE button to confirm it and move on to the next digit. Press the Menu button to confirm.			

Downloaded From www.Gas101.Co.Uk

INFO (ⓘ) - display only
- accessed by pressing the button ⓘ

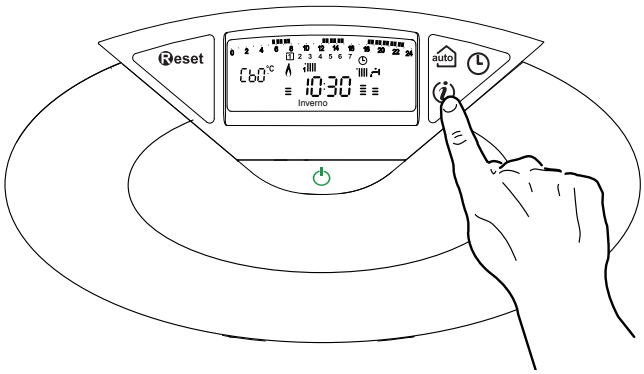

If the INFO button is pressed, a menu is accessed which enables the data listed in the table below to be displayed.
The display scrolls through various information when the encoder is turned.
Press the Esc button to exit.

Informations displayed
Time of day - Hour
Heating circuit pressure (bar)
External temperature (°C) *-only with external sensor connected*
Room temperature (°C) - only active when the BUS device is connected
D.H.W. Flow rate (l/m)
Set C.H. temperature (°C)
Set D.H.W. temperature (°C)
Month until next maintenance
Technical Assistance Centre telephone number and name (only display if setted parameters 890 - 891)
D.H.W. comfort temperature (°C) - if activated
AUTO Function *"enabled"* or *"disabled"* if the symbol flash on the display
Storage temperature °C only for boiler with storage tank

Downloaded From www.Gas101.Co.Uk

Important
Maintenance is an essential part of the safe and efficient operation of the boiler and ensures its durability. It should be performed according to the instructions given in current legislation. Perform combustion analysis regularly in order to check the operating efficiency of the boiler and to make sure any polluting substances released are within the boudaries set by current legislation.
Before beginning maintenance work:
- Disconnect the appliance from the electricity supply by turning the external bipolar switch to the "OFF" position;
- Close the gas valve and the central heating and domestic hot water system valves.

After the work has been completed the initial settings will be restored.

General comments
It is recommended that the following inspections be carried out on the boiler at least once a year:
1. Check the seals in the water part and, if necessary, replace the gaskets and restore the seal to perfect working order.
2. Check the seals in the gas part and, if necessary, replace the gaskets and restore the seal to perfect working order.
3. Visually check the overall condition of the boiler.
4. Visually check the combustion and, if necessary, disassemble and clean the burner.
5. Following the inspection detailed in point "3", disassemble and clean the combustion chamber, if necessary.
6. Following the inspection detailed in point "4", disassemble and clean the burner and injector, if necessary.
7. Cleaning the primary heat exchanger
8. Make sure the following heating safety devices are operating correctly:
   - temperature limit safety device.
9. Make sure that the following gas part safety devices are operating correctly:
   - absence of gas or flame safety device (ionisation).
10. Check the efficiency of the domestic hot water production process (test the flow rate and temperature).
11. Perform a general inspection of the boiler operation.
12. Remove oxide from the detection electrode using an emery cloth.
13. These checks are not exhaustive. Further mechanical, electrical and combustion maintenance checks may be required.

Operational test
After having carried out the maintenance operations, fill the heating circuit at a pressure of approximately 1.5 bar and release the air from the system.
Fill the domestic hot water system at the same time.
- Begin operating the boiler.
- If necessary, release the air from the heating system again.
- Check the settings and make sure all the command, adjustment and monitoring parts are working correctly.
- Check the flue system is sealed and operating correctly.

Draining procedures
The heating system must be drained using the following procedure:
- Switch off the boiler, make sure the external bipolar switch is in the OFF position and shut off the gas valve;
- Loosen the automatic air relief valve;
- Open the system drain off cock and collect the escaping water in a container;
- Empty the water from the lowest points of the system (where applicable).

If the system is to be left inactive in areas where the room temperature may fall below 0°C during winter, we recommend that anti-freeze liquid is added to the water in the heating system in order to avoid the need for repeated draining; when this liquid is used make sure it is compatible with the stainless steel used for the bodywork of the boiler.
We recommend the use of anti-freeze products which contain PROPYLENE GLYCOLS as these inhibit corrosion and that they are used in conjunction with the anti-scaling and anti-corrosion function, in the quantities suggested by the manufacturer, at the mimimum temperature.
Regularly check the pH level of the water/anti-freeze mix in the boiler circuit and replace it when the value measured is lower than the limit prescribed by the manufacturer.
DO NOT MIX DIFFERENT TYPES OF ANTI-FREEZE.
The manufacturer will not be held liable for any damage caused by the appliance or the system due to the use of inappropriate anti-freeze substances or additives.

Draining the domestic hot water system and indirect cylinder
Every time there is a danger of freezing, the domestic hot water system must be drained as follows:
- Shut off the water mains inlet valve;
- Open all the hot and cold water taps;
- Empty the water from the lowest points of the system (where applicable).

WARNING
Before handling, empty all components which may contain hot water, performing bleeding where necessary.
Descale the components in accordance with the instructions provided on the safety data leaflet supplied with the product used, make sure the room is well ventilated, wear protective clothing, avoid mixing different products, and protect the appliance and surrounding objects.
Seal all openings used to take a gas pressure reading or to make any gas adjustments.
Make sure that the nozzle is compatible with the supplied gas.
If a smell of burning is detected or smoke is seen leaking from the appliance, or there is a smell of gas, disconnect it from the electricity supply, shut off the gas valve, open the windows and call for technical assistance.

Cleaning the primary exchanger
Cleaning the smoke side
The inside of the primary exchanger is accessed by removing the burner. Wash with water and detergent using a non-metallic rifle-type brush, rinse with water.

Cleaning the trap
The trap is accessed by emptying the condensate bowl located in the bottom section. Wash with water and detergent.
Replace the condensate collection bowl in its housing.
NB: In the event of prolonged use of the appliance, the trap must be filled before being used again.
A lack of water in the trap is dangerous and may cause smoke to be released into the atmosphere.

Downloaded From www.Gas101.Co.Uk

1. GENERAL ACCESS

GENERAL ACCESS			
Tools			**Time** 3 min
1	Unclip the cover to remove	Remove the two screws	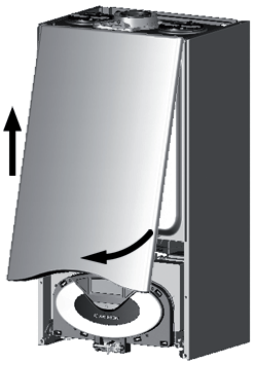 Remove the front panel
2	Lower the electrical box	Remove the combustion chamber front panel by releasing the clips	

Downloaded From www.Gas101.Co.Uk

2. ELECTRICAL UNIT

2.1 CONTROL BOX ACCESS

CONTROL BOX ACCESS			
Tools 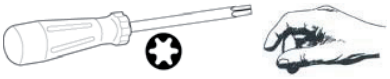			**Time** 4 min
1	Remove the front panel as above and pivot the electrical box	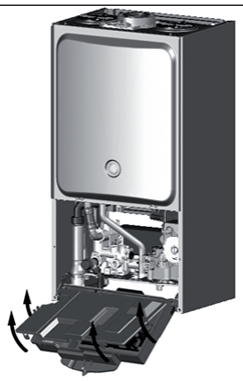 Remove the two screws and unlock the four clamps to gain access to the control box	

2.2 FUSE

FUSE			
Tools 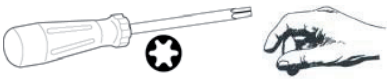			**Time** 5 min
1	Open the control box as above	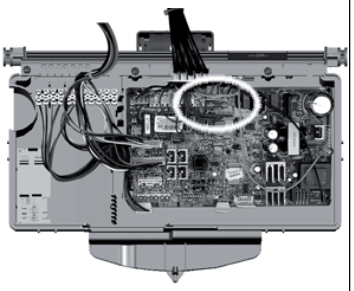 Remove the fuse	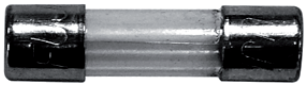

Downloaded From www.Gas101.Co.Uk

2.3 MAIN PCB

MAIN PCB			
Tools			**Time** 7 min
1	After opening the control box, disconnect the electrical plug connectors	Unscrew the two screws and remove the PCB	

2.4 DISPLAY PCB

DISPLAY PCB			
Tools			**Time** 7 min
1	Unclip the cover to remove	Lower the door and remove the two control knobs	Unscrew the four screws and pull the assembly towards you
2	Disconnect the electrical plug connectors, unlock the two clamps, and remove the PCB		

Downloaded From www.Gas101.Co.Uk

3. HYDRAULIC UNIT

3.1 RIGHT HAND HYDRAULIC BLOCK ASSEMBLY

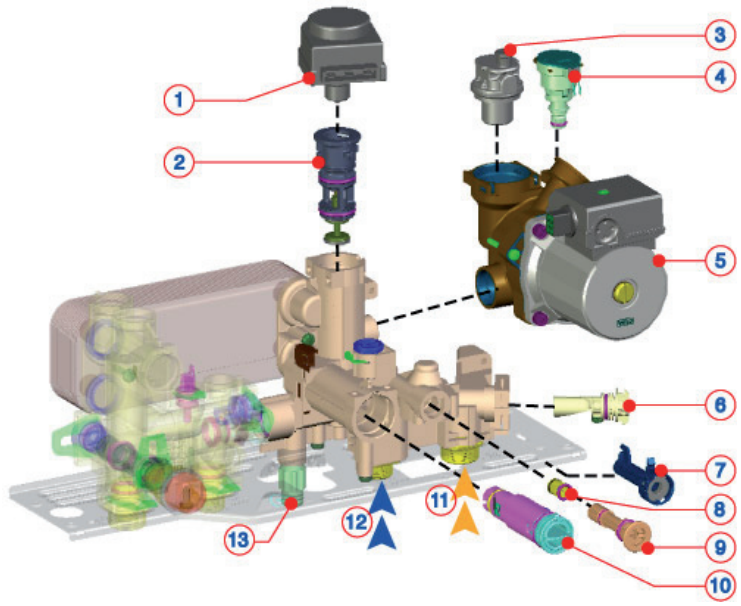

LEGEND	
1.	Diverter valve motor
2.	Diverter valve
3.	Auto air vent
4.	Primary water pressure sensor
5.	Pump
6.	Central heating filter
7.	Not applicable in UK
8.	Non-return valve
9.	Non-return valve assembly
10.	DHW flow switch assembly
11.	Central heating return
12.	Cold water inlet (DHW)
13.	Central heating drain valve

3.2 3 WAY VALVE

3 WAY VALVE UNIT			
Tools		**Time**	5 min
1	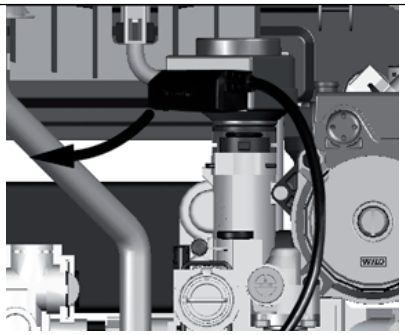 Unplug the diverter valve cable	Remove the clip and lift the motor from the diverter valve body	
2	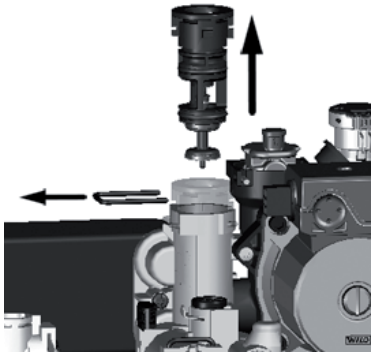 Drain the boiler (see 3.3). Remove the clip and lift the diverter valve from the assembly	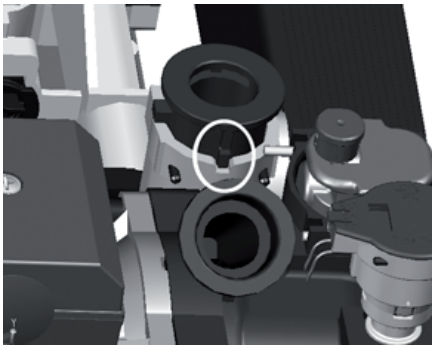 When reassembling, ensure the diverter valve is aligned correctly	

Downloaded From www.Gas101.Co.Uk

3.3 DRAINING

DRAINING			
Tools		Time	5 min
1	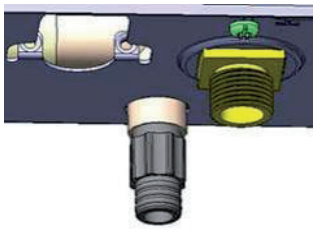 Turn the drain valve anti-clockwise to open and drain the water from the boiler.		

3.4 AUTOMATIC AIR VENT

AUTOMATIC AIR VENT			
Tools		Time	5 min
1	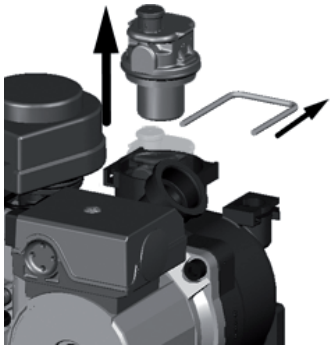 Drain boiler (see 3.3). Remove the clip and lift the AAV from the assembly		

3.5 PRIMARY WATER PRESSURE SENSOR

PRIMARY WATER PRESSURE SENSOR			
Tools		Time	5 min
1	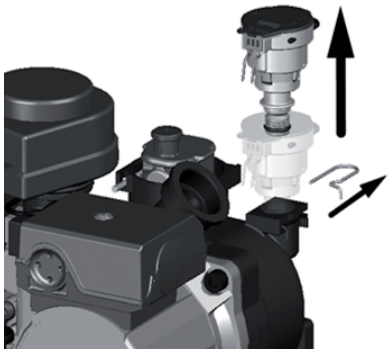 Drain boiler (see 3.3). Remove the fixing clip, unplug the electrical connector and lift the sensor from the assembly		

Downloaded From www.Gas101.Co.Uk

3.6 PUMP

PUMP			
Tools			Time 10 min
1	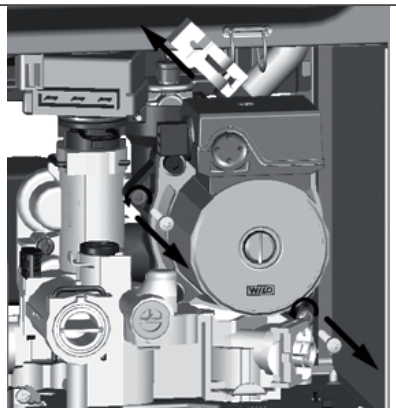 Drain boiler (see 3.3). Remove the clip and the two screws	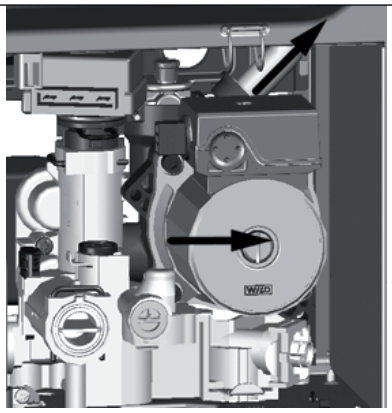 Disconnect the pipe and then move the pump to the right disengage	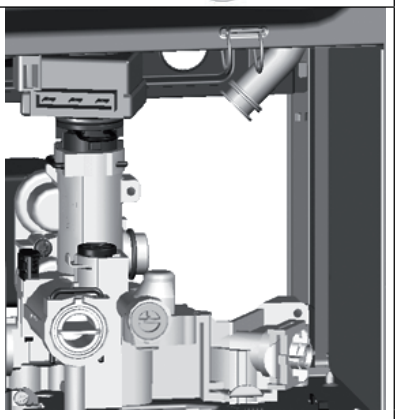 Remove the pump
2	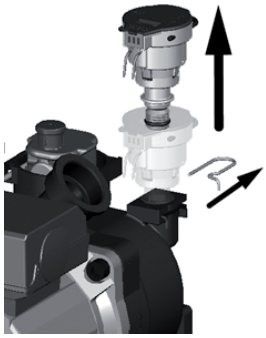 Remove the sensor (see 3.5)	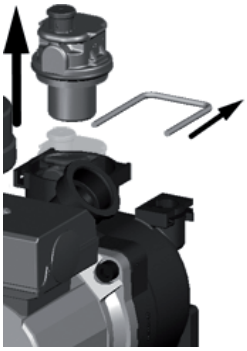 Remove the AAV (see 3.4)	

3.7 CH FILTER

CH FILTER			
Tools			Time 5 min
1	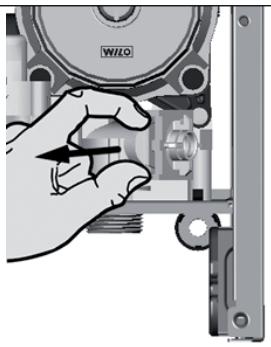 Drain boiler (see3.3). Remove the clip	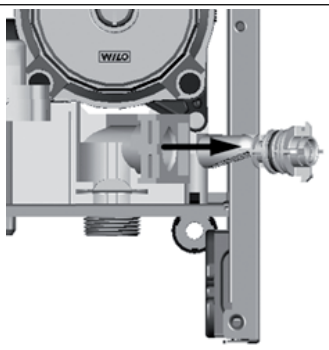 Remove the filter	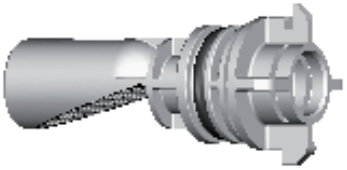

Downloaded From www.Gas101.Co.Uk

3.8 DHW FLOW SWITCH ASSEMBLY

DHW FLOW SWITCH ASSEMBLY			
Tools		**Time**	5 min
1	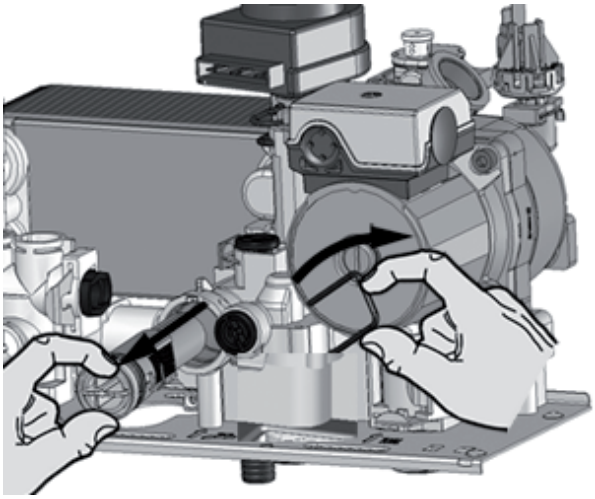 Drain boiler (see 3.3). Remove the clip and pull the flow switch assembly towards you	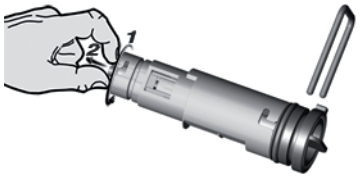 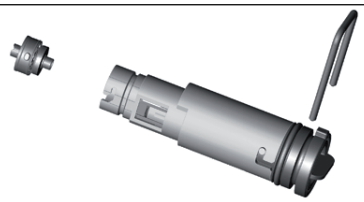 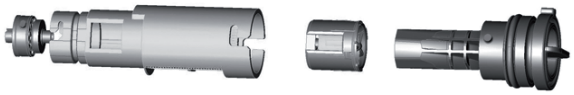 Twist the flow switch assembly to disengage	

3.9 LEFT HAND HYDRAULIC BLOCK ASSEMBLY

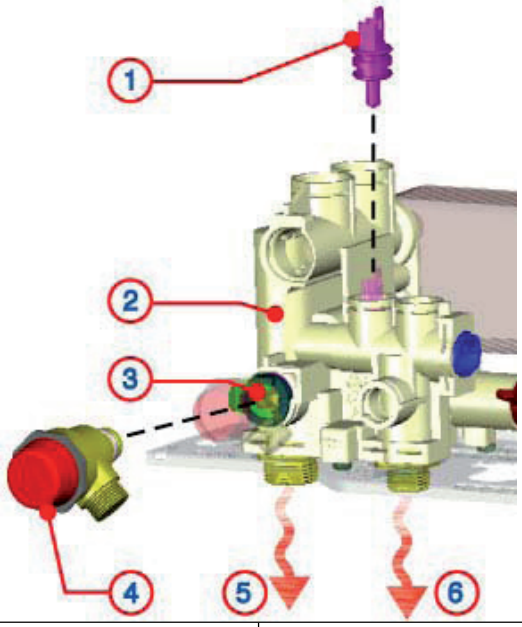

1. DHW temperature sensor	**4.** Safety valve
2. Left hand hydraulic block	**5.** Central heating flow
3. By-pass assembly	**6.** Domestic hot water outlet

Downloaded From www.Gas101.Co.Uk

3.10 DHW TEMPERATURE SENSOR

DHW TEMPERATURE SENSOR				
Tools			**Time**	5 min
1	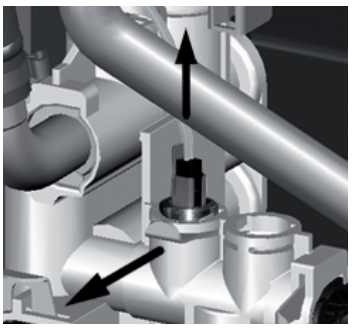 Isolate the cold water supply and drain the DHW circuit. Unplug the DHW sensor and remove the clip	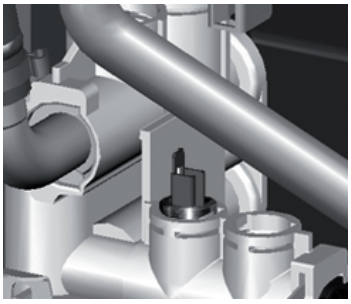 Sensor without wire and clip	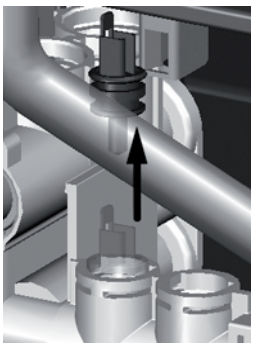 Lift the sensor from the assembly	

3.11 SECONDARY HEAT EXCHANGER

SECONDARY HEAT EXCHANGER		
Tools		**Time** 10 min
1	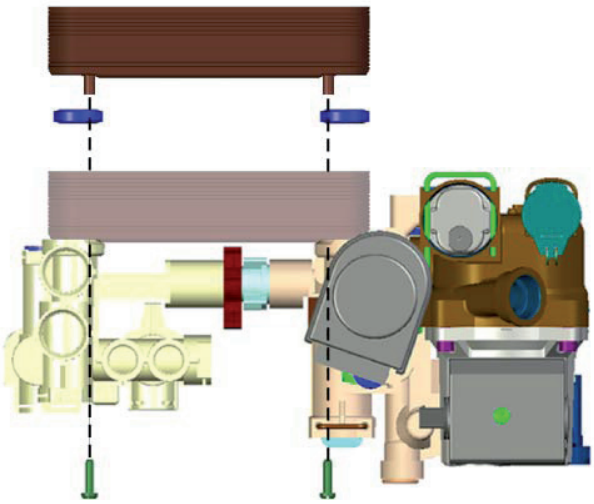 Drain primary and domestic hot water circuits. Remove the two screws and remove the heat exchanger	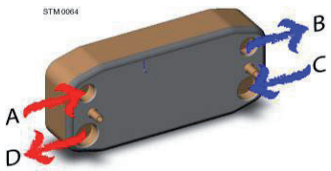

Downloaded From www.Gas101.Co.Uk

3.12 SAFETY VALVE

SAFETY VALVE			
Tools		**Time** 5 min	
1	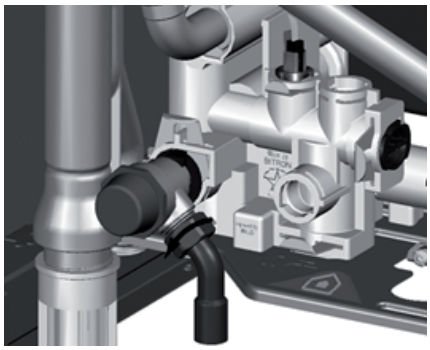 Drain boiler (see 3.3). Disconnect the discharge pipe	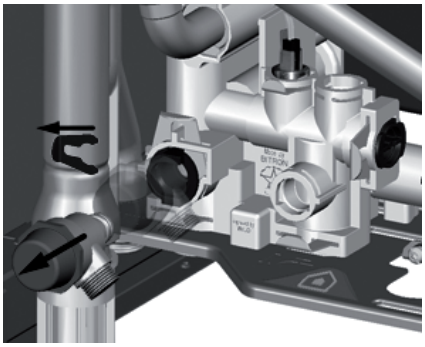 Remove the first clip on the left and pull the safety valve towards you	

3.13 BY-PASS ASSEMBLY

BY-PASS ASSEMBLY			
Tools 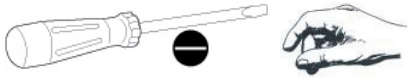		**Time** 5 min	
1	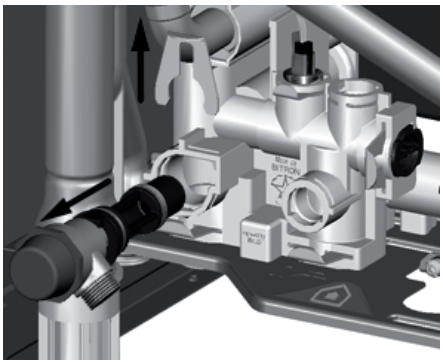 Drain boiler (see 3.3). Remove the second clip and pull the assembly toward you	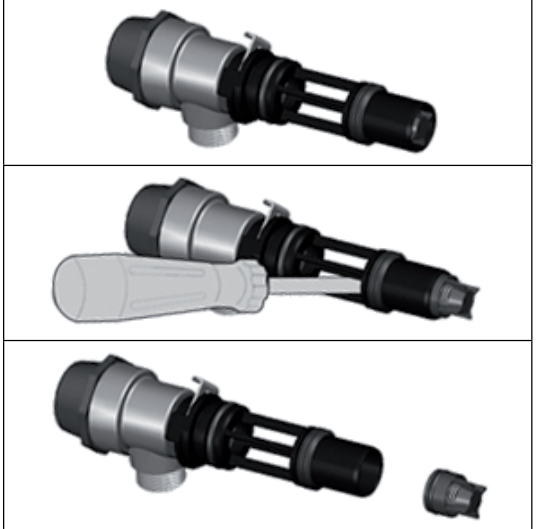 Push on the by-pass to disengage it	

Downloaded From www.Gas101.Co.Uk

3.14 CONDENSE TRAP

CONDENSE TRAP			
Tools		Time	5 min
1	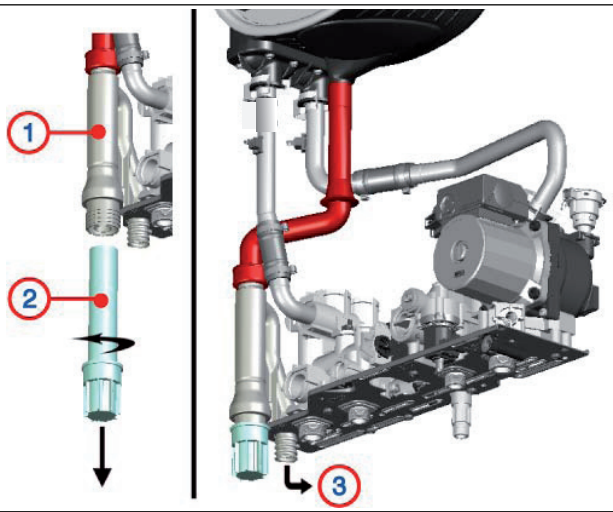	Unscrew the condense trap from the condense body 1- Condense body 2- Condense trap 3- Condense outlet pipe	

3.15 TEMPERATURE SENSORS

Tools		Time	5 min
1	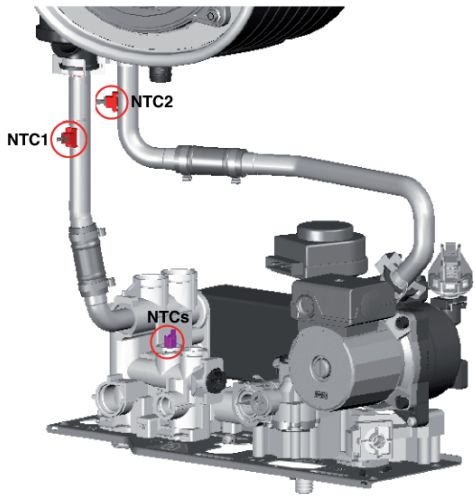 NTC1 : Black wires NTC2 : Grey wires	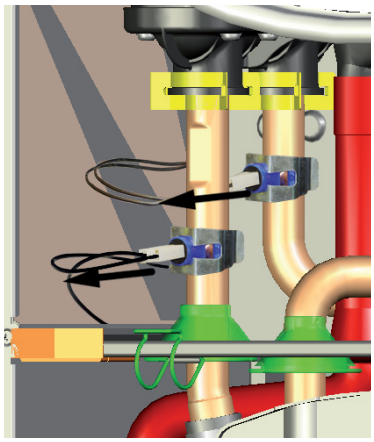 Unplug the electrical connectors	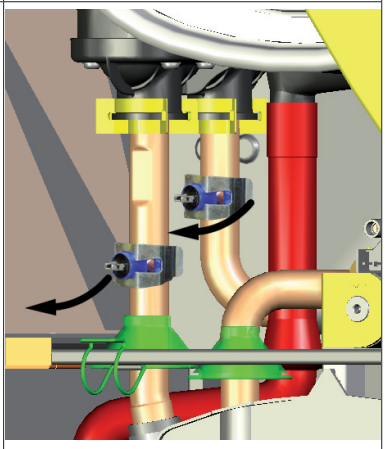 Remove the clip and the temperature sensor

IMPORTANT ! Do not use conducting paste for the contact sensors because it will alter the resistance value.

TEMPERATURE	RESISTANCE (kOmh)
0	27
10	17
20	12
25	10
30	8
40	5
50	4

Downloaded From www.Gas101.Co.Uk

MANUAL AIR VENT		
Tools		**Time** 5 min
1	Drain boiler (see 3.3) Remove the clip and lift the manual air vent from the exchanger	

Downloaded From www.Gas101.Co.Uk

3.17 MAIN HEAT EXCHANGER

MAIN HEAT EXCHANGER			
Tools			**Time** 20 min
1	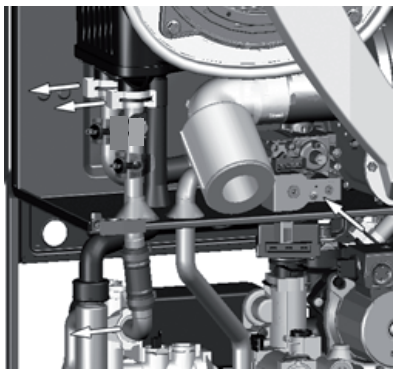 Drain boiler (see 3.3). Remove the four clips and disconnect the two pipes between the exchanger and pump and between the exchanger and left hand hydraulic block	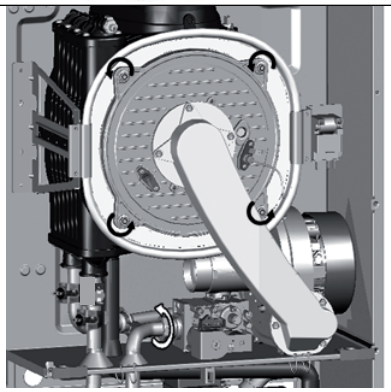 Isolate the gas supply. Remove the four screws and disconnect the gas pipe from the gas valve	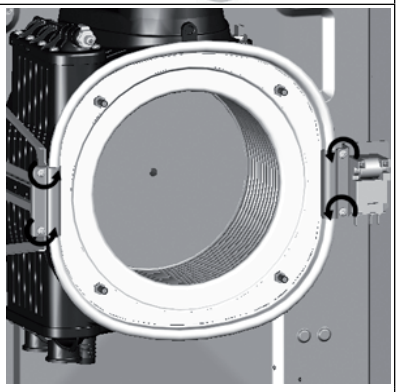 Remove the four screws to free the heat exchanger
2	Pull the heat exchanger towards you	Remove the clip and lift the manual air vent	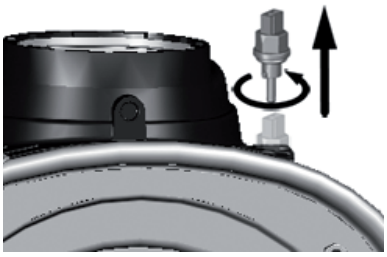 Twist the thermal fuse to remove

Downloaded From www.Gas101.Co.Uk

4. BURNER UNIT

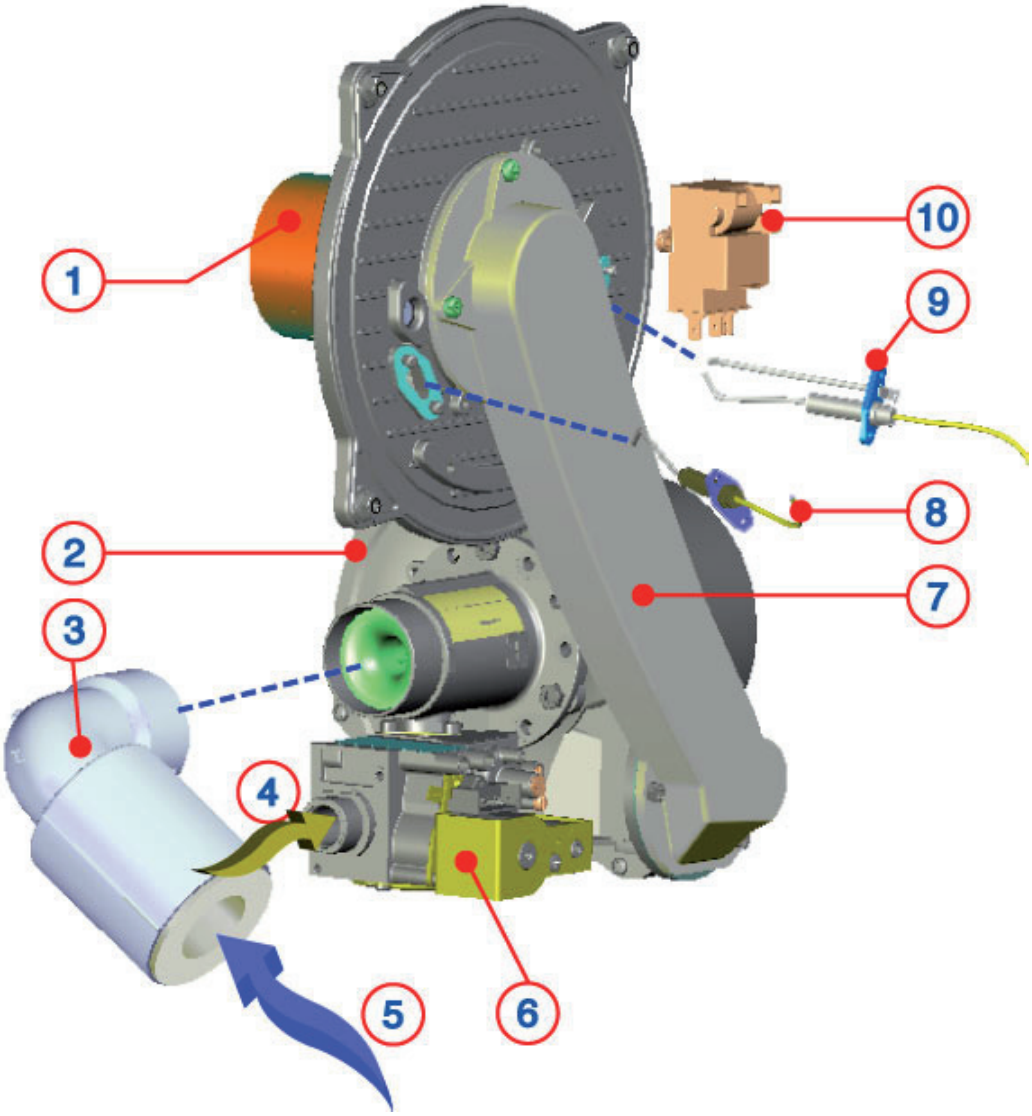

LEGEND	
1. Burner	**6.** Gas valve
2. Fan	**7.** Mixing tube
3. Silencer	**8.** Detection electrode
4. Gas inlet	**9.** Ignition electrode
5. Air inlet	**10.** Spark generator

Downloaded From www.Gas101.Co.Uk

4.1 SPARK GENERATOR

SPARK GENERATOR			
Tools			**Time** 5 min
1	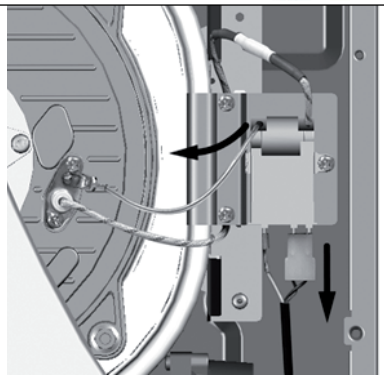 Unplug the ignition electrode from the spark generator	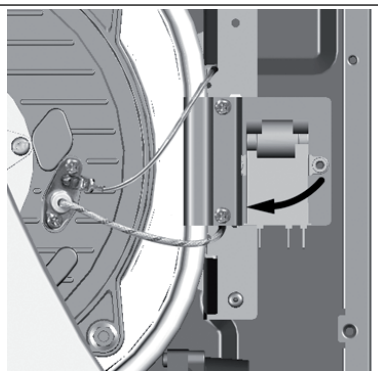 Remove the screw and the spark generator	

4.2 ELECTRODES

ELECTRODES			
Tools			**Time** 5 min
1	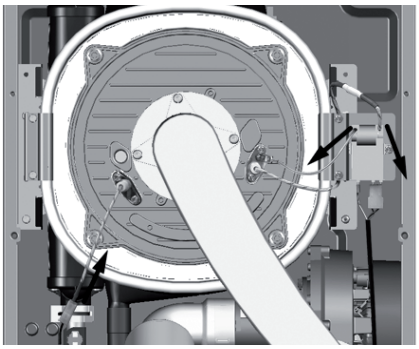 Unplug the electrodes	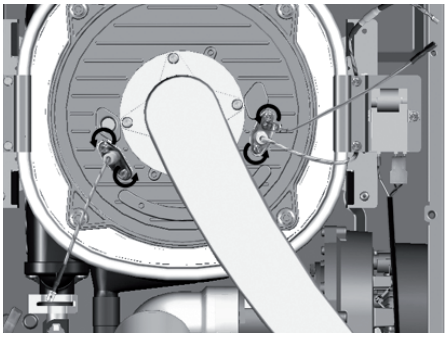 Remove the screws and pull the electrodes towards you.	

Downloaded From www.Gas101.Co.Uk

4.3 BURNER

BURNER			
Tools			**Time** 15 min
1	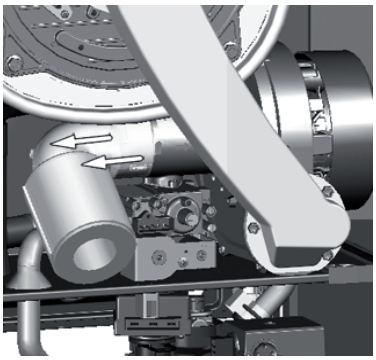 Remove the silencer	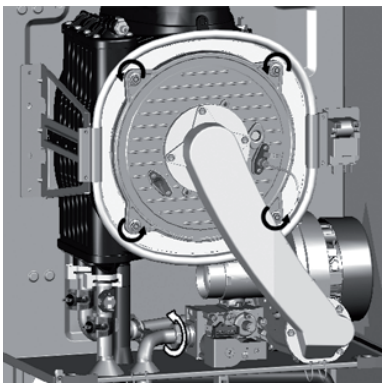 Isolate the gas supply. Remove the four screws and disconnect the gas pipe from the gas valve	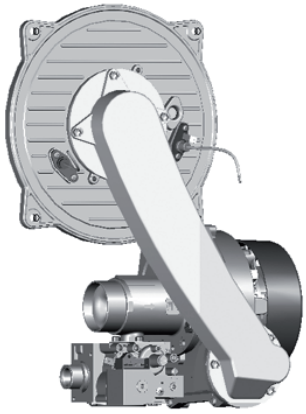 Pull the assembly towards you
2	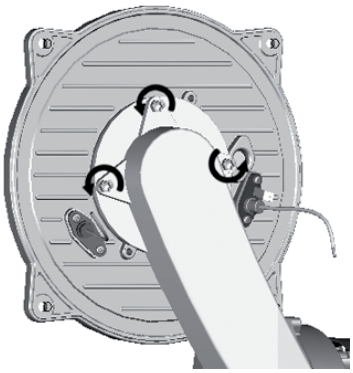 Remove the three screws to free the burner door	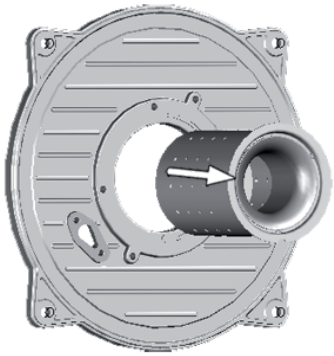 Pull the burner toward you. Replace any gaskets that are damaged or showing signs of deterioration	

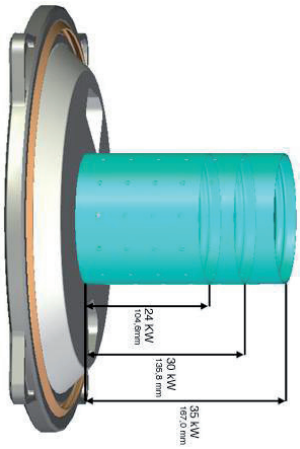

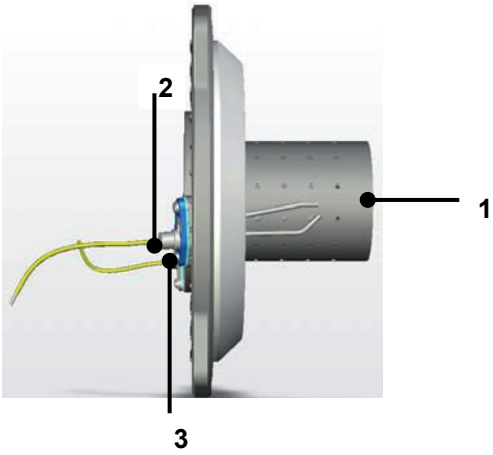

1. Stainless Steel Burner		**Power**	**Length**	**Venturi**
2. Ignition electrode		24 KW	104.6 mm	Ø 42 mm
3. Detection electrode		30 KW	135.8 mm	/
		38 KW	167 mm	/

Downloaded From www.Gas101.Co.Uk

4.4 FAN

FAN			
Tools			**Time** 15 min
1	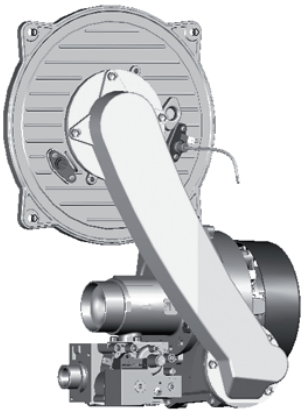 Remove the combustion assembly (see 4.3)	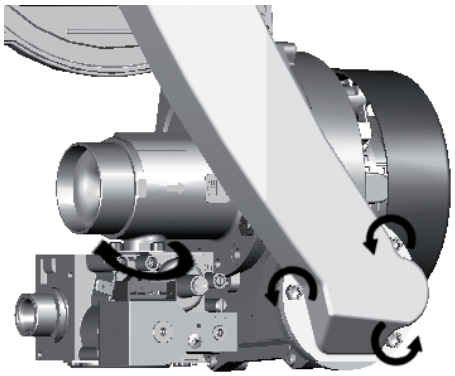 Remove the three screws to free the fan. Twist the gas valve anti-clockwise to disengage it from the fan	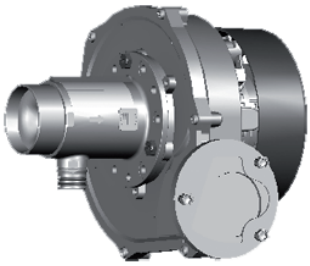

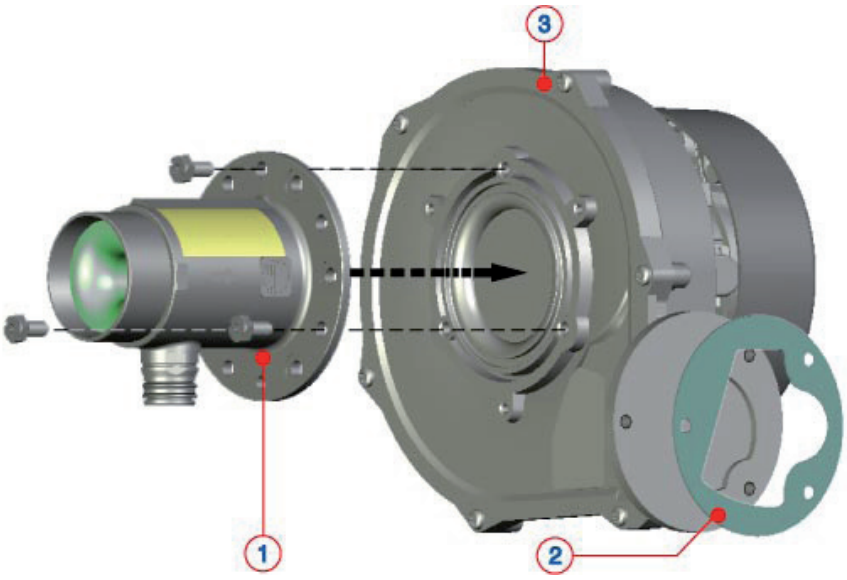

1. Venturi	
2. Gasket	
3. Fan	

Fan & mixer venturi according to the model		
Power	**Fan**	**Venturi diameter**
24 KW	EBM RG 128 45 W	Ø 17 mm
30 KW	EBM RG 128 45 W	Ø 21 mm
38 KW	EBM RG 128 45 W	Ø 25 mm

Downloaded From www.Gas101.Co.Uk

4.5 GAS VALVE

GAS VALVE			
Tools			**Time** 15 min
1	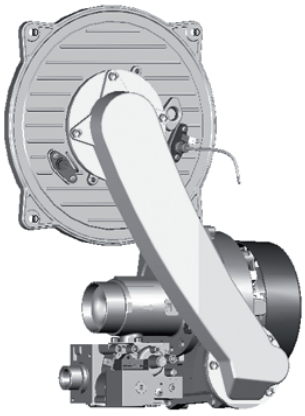 Remove the combustion assembly (see 4.3)	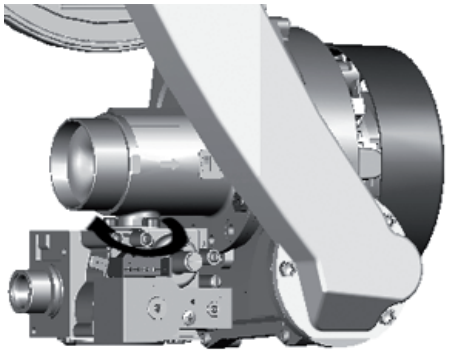 Twist the gas valve anti-clockwise to disconnect it from the fan	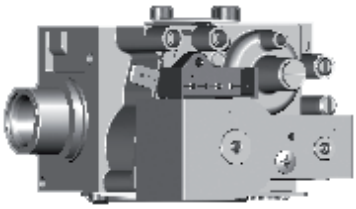 Replacement Gas Valves are not factory set and will need to be set up (see page 34)

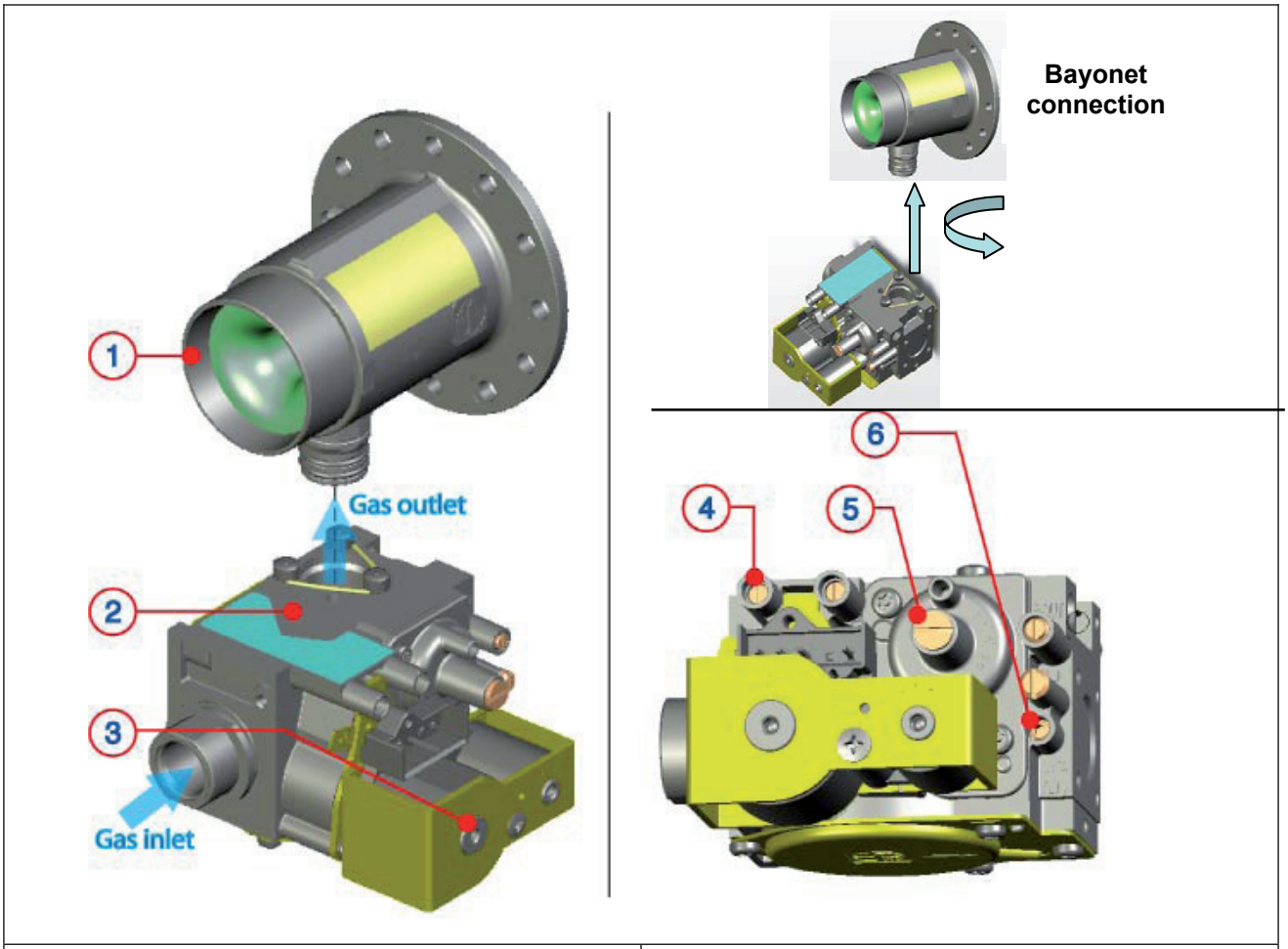

1. Venturi	4. Inlet test nipple
2. Gas valve	5. Offset adjustment
3. Solenoids	6. Throttle adjustment

Downloaded From www.Gas101.Co.Uk

5. ANNUAL MAINTENANCE

Plate heat exchanger

Maintenance Interval: As necessary

How: To measure specification of DHW performance.

By-pass & Safety valve

Maintenance Interval: Annually

How: Visual inspection / Clean as necessary

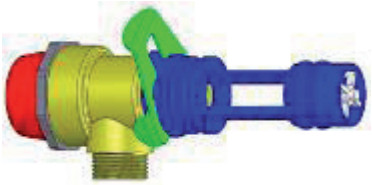

Central heating filter

Maintenance Interval: Annually

How: Visual inspection / Clean as necessary

Expansion vessel

Maintenance Interval: Annually

How: Check air pressure is at 1 bar (System drained)

Flow switch operation

Maintenance Interval: Annually

How: Visual inspection / Clean as necessary
/ Check flow rate

Ignition & detection electrodes

Maintenance Interval: Annually

How: Visual inspection / Clean as necessary / Distance from the burner / Ionisation current more than 1 μA

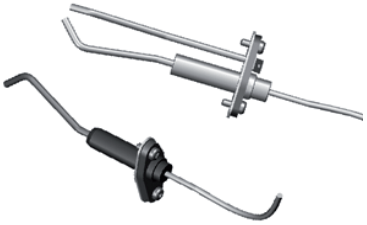

Burner

Maintenance Interval: Annually

How: Visual inspection / Clean as necessary

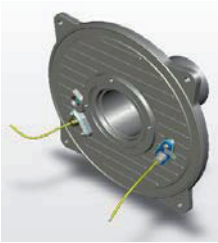

Downloaded From www.Gas101.Co.Uk

Fan

Maintenance Interval: Annually

How : Visual inspection / Clean as necessary

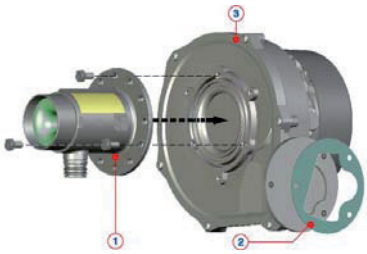

Primary Heat exchanger

Maintenance Interval: Annually

How : Visual inspection / Clean as necessary

Condensate trap

Maintenance Interval: Annually
or after cleaning primary heat exchanger

How : Visual inspection / Clean as necessary /
Add water before replacing

Pump

Maintenance Interval: At the first ignition and annually

How: Check that the AAV is open /
Visual inspection / Clean as necessary

Downloaded From www.Gas101.Co.Uk

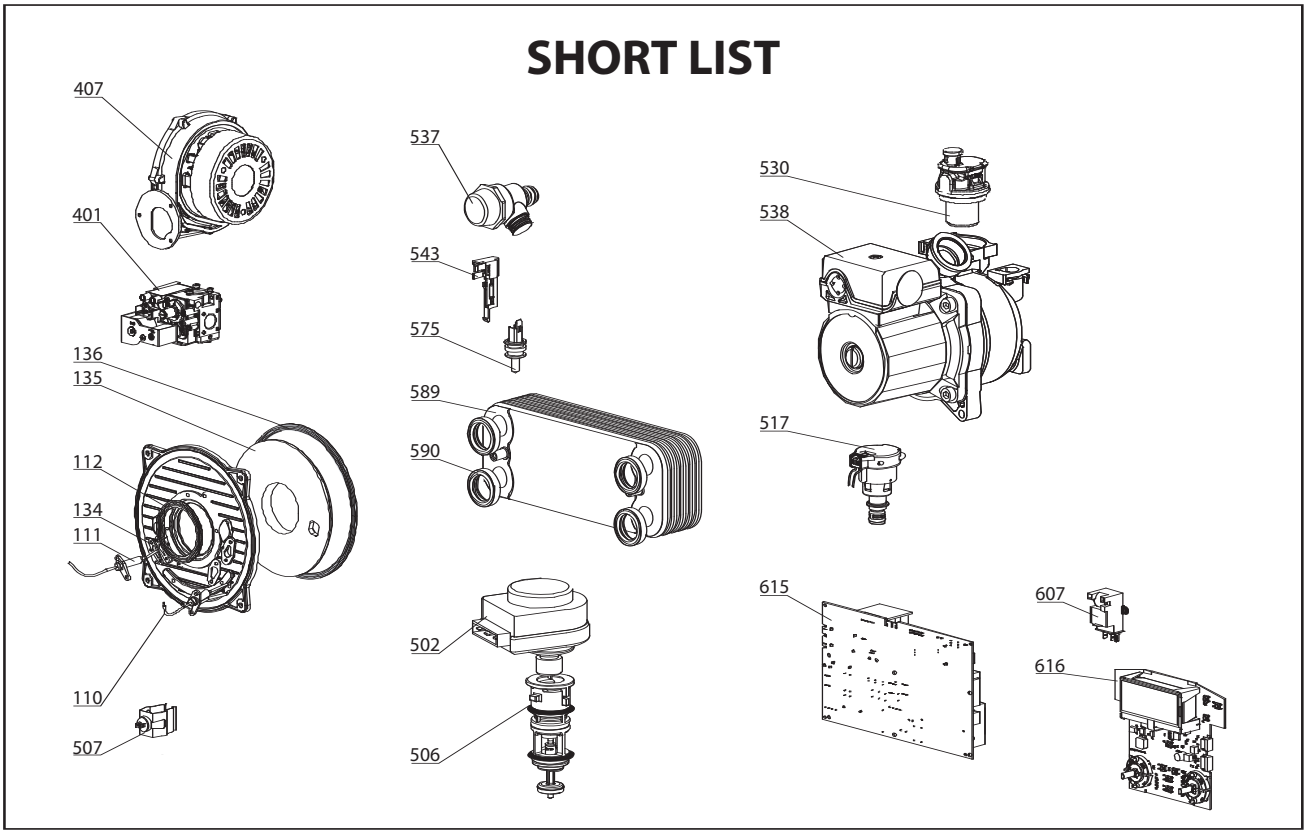

Key N	Description	Manf. Pt. N	Other	Type	GENUS HE 24	GENUS HE 30	GENUS HE 38		Manf. date from	Manf. date to
0100	**BURNER ASSEMBLY**									
0110	IGNITION ELECTRODE	61317432			●	●	●			
0111	IONIZATION ELECTRODE	61317433			●	●	●			
0112	GASKET D:85-66.5-2.5	61314753			●	●	●			
0134	ELECTRODE GASKET	60000286			●	●	●			
0135	COMBUSTION CHAMBER LINING KIT	60000297			●	●	●			
0136	DOOR GASKET	60000623			●	●	●			
0400	**GAS SECTION**									
0401	GAS VALVE	60000537			●	●	●			
0407	FAN ASSY	60000622			●	●	●			
0500	**HYDRAULIC BLOCK**									
0502	MOTOR - THREE-WAY VALVE	61302483			●	●	●			
0506	3-WAY SPRING KIT (D.H.W.)	65104314			●	●	●			
0507	TEMPERATURE PROBE + CLIP	990686			●	●	●			
0517	LOW PRESSURE SWITCH	65104321			●	●	●			
0530	AUTO AIR VENT WITH O-RING	65104703			●	●	●			
0537	PRESSURE RELIEF VALVE	61312668			●	●	●			
0538	PUMP 6M 2V	60000591			●	●	●			
0543	SENSOR (REED)	65104323			●	●	●			
0575	NTC PROBE	65104338			●	●	●			
0589	SECONDARY EXCHANGER	65104333			●	●	●			
0590	LIP SEAL	61002249			●	●	●			
0600	**ELECTRICAL BOX**									
0607	IGNITER	61002105-20			●	●	●			
0615	PRINTED CIRCUIT BOARD	60000566			●	●	●			
0616	PRINTED CIRCUIT BOARD (DISPLAY)	60000730			●	●	●			

Ind 02 - 03/04/2007

Downloaded From www.Gas101.Co.Uk

GAS BOILER SYSTEM COMMISSIONING CHECKLIST

This Commissioning Checklist is to be completed in full by the competent person who commissioned the boiler as a means of demonstrating compliance with the appropriate Building Regulations and then handed to the customer to keep for future reference.

Failure to install and commission this equipment to the manufacturer's instructions may invalidate the warranty but does not affect statutory rights.

Customer Name _____ Telephone Number _____

Address _____

Boiler Make and Model _____

Boiler Serial Number _____

Commissioned by *(print name)* _____ CORGI ID Number _____

Company Name _____ Telephone Number _____

Company Address _____

_____ Commissioning Date _____

To be completed by the customer on receipt of a Building Regulations Compliance Certificate*:

Building Regulations Notification Number *(if applicable)* _____

CONTROLS Tick the appropriate boxes

Time and Temperature Control to Heating	Room Thermostat and Programmer/Timer ☐	Programmable Room Thermostat ☐	Load/Weather Compensation ☐	Optimum Start Control ☐
Time and Temperature Control to Hot Water			Cylinder Thermostat and Programmer/Timer ☐	Combination Boiler ☐
Heating Zone Valves			Fitted ☐	Not Required ☐
Hot Water Zone Valves			Fitted ☐	Not Required ☐
Thermostatic Radiator Valves			Fitted ☐	Not Required ☐
Automatic Bypass to System			Fitted ☐	Not Required ☐
Boiler Interlock				Provided ☐

ALL SYSTEMS

The system has been flushed and cleaned in accordance with BS7593 and boiler manufacturer's instructions Yes ☐

What system cleaner was used? _____

What inhibitor was used? _____ Quantity _____ *litres*

CENTRAL HEATING MODE Measure and Record:

Gas Rate _____ m^3/hr OR _____ ft^3/hr

Burner Operating Pressure (if applicable) _____ mbar OR Gas Inlet Pressure _____ mbar

Central Heating Flow Temperature _____ °C

Central Heating Return Temperature _____ °C

COMBINATION BOILERS ONLY

Is the installation in a hard water area (above 200ppm)? Yes ☐ No ☐

If yes, has a water scale reducer been fitted? Yes ☐ No ☐

What type of scale reducer has been fitted? _____

DOMESTIC HOT WATER MODE Measure and Record:

Gas Rate _____ m^3/hr OR _____ ft^3/hr

Burner Operating Pressure (at maximum rate) _____ mbar OR Gas Inlet Pressure (at maximum rate) _____ mbar

Cold Water Inlet Temperature _____ °C

Hot water has been checked at all outlets Yes ☐ Temperature _____ °C

Water Flow Rate _____ *l/min*

CONDENSING BOILERS ONLY

The condensate drain has been installed in accordance with the manufacturer's instructions and/or BS5546/BS6798 Yes ☐

ALL INSTALLATIONS

If required by the manufacturer, record the following CO_2 _____ % OR CO _____ *ppm* OR CO/CO_2 Ratio _____

The heating and hot water system complies with the appropriate Building Regulations Yes ☐

The boiler and associated products have been installed and commissioned in accordance with the manufacturer's instructions Yes ☐

The operation of the boiler and system controls have been demonstrated to and understood by the customer Yes ☐

The manufacturer's literature, including Benchmark Checklist and Service Record, has been explained and left with the customer Yes ☐

Commissioning Engineer's Signature _____

Customer's Signature _____

(To confirm satisfactory demonstration and receipt of manufacturer's literature)

*All installations in England and Wales must be notified to Local Authority Building Control (LABC) either directly or through a Competent Persons Scheme. A Building Regulations Compliance Certificate will then be issued to the customer.

benchmark COLLECTIVE MARK
THE MARK OF QUALITY FOR THE INSTALLATION, COMMISSIONING AND SERVICING OF DOMESTIC HEATING AND HOT WATER SYSTEMS

©Heating and Hotwater Industry Council (HHIC)

www.centralheating.co.uk

Downloaded From www.Gas101.Co.Uk

GAS BOILER SYSTEM COMMISSIONING CHECKLIST

This Commissioning Checklist is to be completed in full by the competent person who commissioned the boiler as a means of demonstrating compliance with the appropriate Building Regulations and then handed to the customer to keep for future reference.

Failure to install and commission this equipment to the manufacturer's instructions may invalidate the warranty but does not affect statutory rights.

Customer Name _____ Telephone Number _____

Address _____

Boiler Make and Model _____

Boiler Serial Number _____

Commissioned by *(print name)* _____ CORGI ID Number _____

Company Name _____ Telephone Number _____

Company Address _____

_____ Commissioning Date _____

To be completed by the customer on receipt of a Building Regulations Compliance Certificate*:

Building Regulations Notification Number *(if applicable)* _____

CONTROLS Tick the appropriate boxes

Time and Temperature Control to Heating	Room Thermostat and Programmer/Timer ☐	Programmable Room Thermostat ☐	Load/Weather Compensation ☐	Optimum Start Control ☐
Time and Temperature Control to Hot Water			Cylinder Thermostat and Programmer/Timer ☐	Combination Boiler ☐
Heating Zone Valves			Fitted ☐	Not Required ☐
Hot Water Zone Valves			Fitted ☐	Not Required ☐
Thermostatic Radiator Valves			Fitted ☐	Not Required ☐
Automatic Bypass to System			Fitted ☐	Not Required ☐
Boiler Interlock				Provided ☐

ALL SYSTEMS

The system has been flushed and cleaned in accordance with BS7593 and boiler manufacturer's instructions Yes ☐

What system cleaner was used? _____

What inhibitor was used? _____ Quantity _____ *litres*

CENTRAL HEATING MODE Measure and Record:

Gas Rate _____ m^3/hr OR _____ ft^3/hr

Burner Operating Pressure (if applicable) _____ mbar OR Gas Inlet Pressure _____ mbar

Central Heating Flow Temperature _____ °C

Central Heating Return Temperature _____ °C

COMBINATION BOILERS ONLY

Is the installation in a hard water area (above 200ppm)? Yes ☐ No ☐

If yes, has a water scale reducer been fitted? Yes ☐ No ☐

What type of scale reducer has been fitted? _____

DOMESTIC HOT WATER MODE Measure and Record:

Gas Rate _____ m^3/hr OR _____ ft^3/hr

Burner Operating Pressure (at maximum rate) _____ mbar OR Gas Inlet Pressure (at maximum rate) _____ mbar

Cold Water Inlet Temperature _____ °C

Hot water has been checked at all outlets Yes ☐ Temperature _____ °C

Water Flow Rate _____ *l/min*

CONDENSING BOILERS ONLY

The condensate drain has been installed in accordance with the manufacturer's instructions and/or BS5546/BS6798 Yes ☐

ALL INSTALLATIONS

If required by the manufacturer, record the following CO_2 _____ % OR CO _____ *ppm* OR CO/CO_2 Ratio _____

The heating and hot water system complies with the appropriate Building Regulations Yes ☐

The boiler and associated products have been installed and commissioned in accordance with the manufacturer's instructions Yes ☐

The operation of the boiler and system controls have been demonstrated to and understood by the customer Yes ☐

The manufacturer's literature, including Benchmark Checklist and Service Record, has been explained and left with the customer Yes ☐

Commissioning Engineer's Signature _____

Customer's Signature _____

(To confirm satisfactory demonstration and receipt of manufacturer's literature)

*All installations in England and Wales must be notified to Local Authority Building Control (LABC) either directly or through a Competent Persons Scheme. A Building Regulations Compliance Certificate will then be issued to the customer.

benchmark COLLECTIVE MARK
THE MARK OF QUALITY FOR THE INSTALLATION, COMMISSIONING AND SERVICING OF DOMESTIC HEATING AND HOT WATER SYSTEMS

©Heating and Hotwater Industry Council (HHIC)

Downloaded From www.Gas101.Co.Uk

Downloaded From www.Gas101.Co.Uk

Downloaded From www.Gas101.Co.Uk

Commercial subsidiaries:

MTS (GB) Limited
MTS Building
Hughenden Avenue
High Wycombe
Bucks HP13 5FT
Telephone: (01494) 755600
Fax: (01494) 459775
Internet: www.mtsgroup.com/uk
E-mail: info@uk.mtsgroup.com
Technical Advice: 0870 241 8180
Customer Service: 0870 600 9888

Professional Team Limited
Suites 9 & 10, Plaza 256
Blanchardstown Corporate Park 2
Ballycoolin
Dublin 15
Telephone: (01) 810 3723
Fax: (01) 810 3727
Internet: www.mtsgroup.com/ie
E-mail: info@ie.mtsgroup.com
Technical Advice: (01) 437 0121
Customer Service: (01) 437 0121

420010096303 - 04/2008