micro SYSTEM

Installation Instructions
Type C Boilers

G.C.N: 41-116-06
41-116-07

LEAVE THESE INSTRUCTIONS WITH THE END-USER

benchmark™
COLLECTIVE MARK

The code of practice for the installation, commissioning & servicing of central heating systems

Downloaded From www.Gas101.Co.Uk

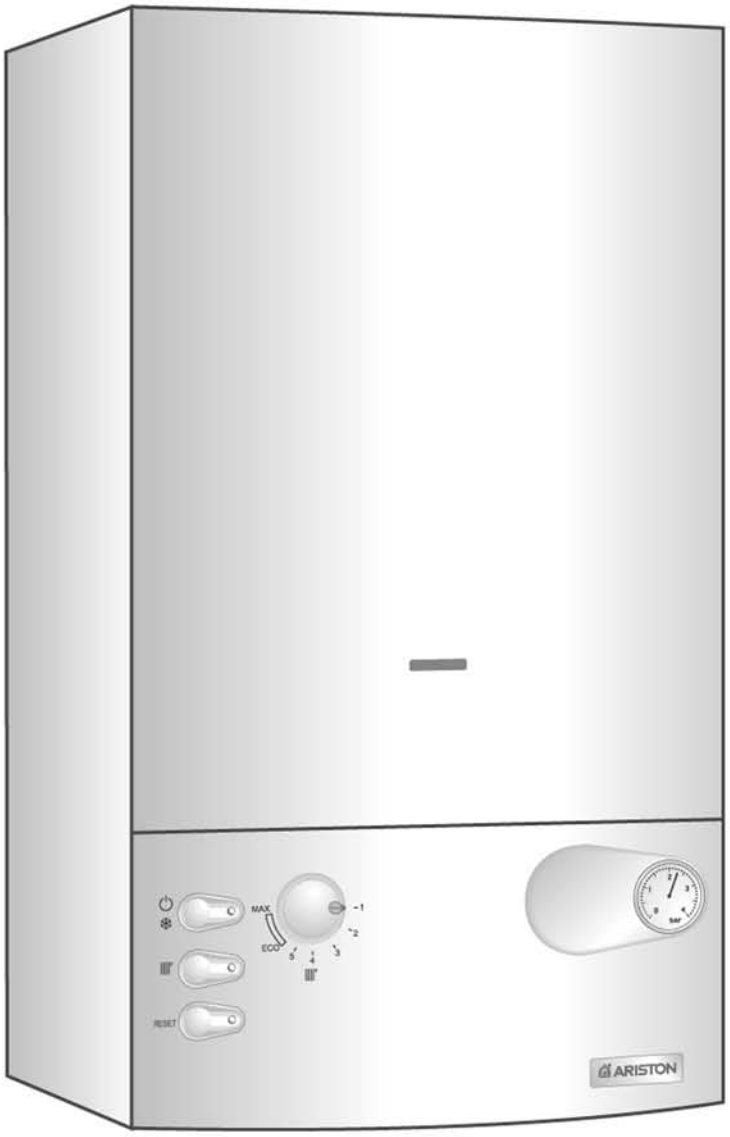

ARISTON

Country of destination: GB/IE

CE

TABLE OF CONTENTS

1. GENERAL INFORMATION

1.1 General Instructions
1.2 Overall View

2. INSTALLATION

2.1 Delivery
2.2 Reference Standards
2.3 Siting the Appliance
2.4 Overall Dimensions
2.5 Clearances
2.6 Mounting the Appliance
2.7 Electrical Connection
2.8 Gas Connection
2.9 Water Connections
2.10 Flue Connection
2.11 Room Thermostat Connection
2.12 Electrical Diagrams
2.13 Gas and Water Circuits

3. D.H.W. STORAGE CYLINDER

3.1 2 port and 3 port Valve Installations
3.2 Domestic Hot Water Priority Kit

4. COMMISSIONING

4.1 Initial Preparation
4.2 Control Panel
4.3 Removing the Front Panel
4.4 Initial Start up
4.5 Operational Adjustments
4.6 Combustion Analysis
4.7 Fume Discharge Monitoring
4.8 Draining the System

5. GAS ADJUSTMENTS

Gas Adjustment Table
5.1 Changing the Type of Gas

6. MAINTENANCE

7. TECHNICAL INFORMATION

Downloaded From www.Gas101.Co.Uk

1. GENERAL INFORMATION

This manual is an integral and essential part of the product. It should be kept with the appliance so that it can be consulted by the user and our authorised personnel.

Please carefully read the instructions and notices about the unit contained in this manual, as they provide important information regarding the safe installation, use and maintenance of the product.

For operating instructions please consult the separate User's Manual.

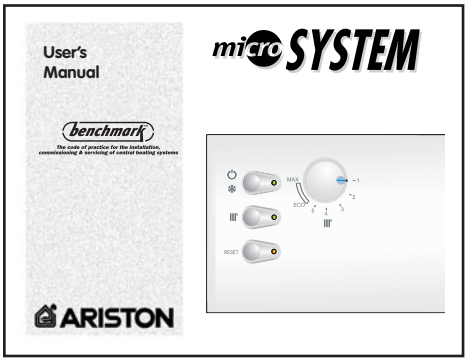

1.1 GENERAL INSTRUCTIONS

Read the instructions and recommendations in these Installation Instructions carefully to ensure proper installation, use and maintenance of the appliance.

Keep this manual in a safe place. You may need it for your own reference while our Servicing Centre technicians or your installer may need to consult it in the future.

This is an appliance for the production of central heating (C.H.).

This appliance **must be used only** for the purpose for which it is designed.
The manufacturer declines all liability for damage caused by improper or negligent use.

No asbestos or other hazardous materials have been used in the fabrication of this product.

Before connecting the appliance, check that the information shown on the data plate and the table in section 7 comply with the electric, water and gas mains of the property. You will find the data plate on the reverse of the control panel.
The gas with which this appliance operates is also shown on the label at the bottom of the boiler.

Do not install this appliance in a damp environment or close to equipment which spray water or other liquids.
Do not place objects on the appliance.
Do not allow children or inexperienced persons to use the appliance without supervision.

If you smell gas in the room, **do not turn on** light switches, use the telephone or any other object which might cause sparks.
Open doors and windows immediately to ventilate the room.
Shut the gas mains tap (at or adjacent to the gas meter) or the valve of the gas cylinder and call your Gas Supplier immediately.
If you are going away for a long period of time, remember to shut the mains gas tap or the gas cylinder valve.

Always disconnect the appliance either by unplugging it from the mains or turning off the mains switch before cleaning the appliance or carrying out maintenance.

In the case of faults or failure, switch off the appliance and turn off the gas tap. Do not tamper with the appliance.
For repairs, call your local Authorised Servicing Centre and request the use of original spare parts. For in-guarantee repairs contact MTS.

Check the following at least once a year:
1 - Check the seals for the water connections; replace any faulty seals.
2 - Check the gas seals; replace any faulty gas seals.
3 - Visual check of the entire unit.

Downloaded From www.Gas101.Co.Uk

4 - Visual check of the combustion process or analysis of combustion by-products (see section 4.5) and cleaning of the burner if needed.
5 - If called for by point. 3, dismantling and cleaning of the combustion chamber.
6 - If called for by point. 4, dismantling and cleaning of the burner jets.
7 - Visual check of the primary heat exchanger:
- check for overheating in the blade assembly;
- clean the exhaust fan if needed.

8 - Adjustment of the flow rate of the gas: flow rate for lighting, partial load and full load.
9 - Check of the heating safety systems:
- safety device for maximum temperature (overheat thermostat);
- safety device for maximum pressure (safety valve).

10- Check of the gas safety systems:
- safety device for lack of gas or flame ionisation (detection electrode);
- safety device for gas cock.

11- Check of the electrical connection (make sure it complies with the instructions in the manual).
12- General check of the combustion by-products of the discharge/ventilation system.
13- Check of the general performance of the unit.

Downloaded From www.Gas101.Co.Uk

FIG. 1.0

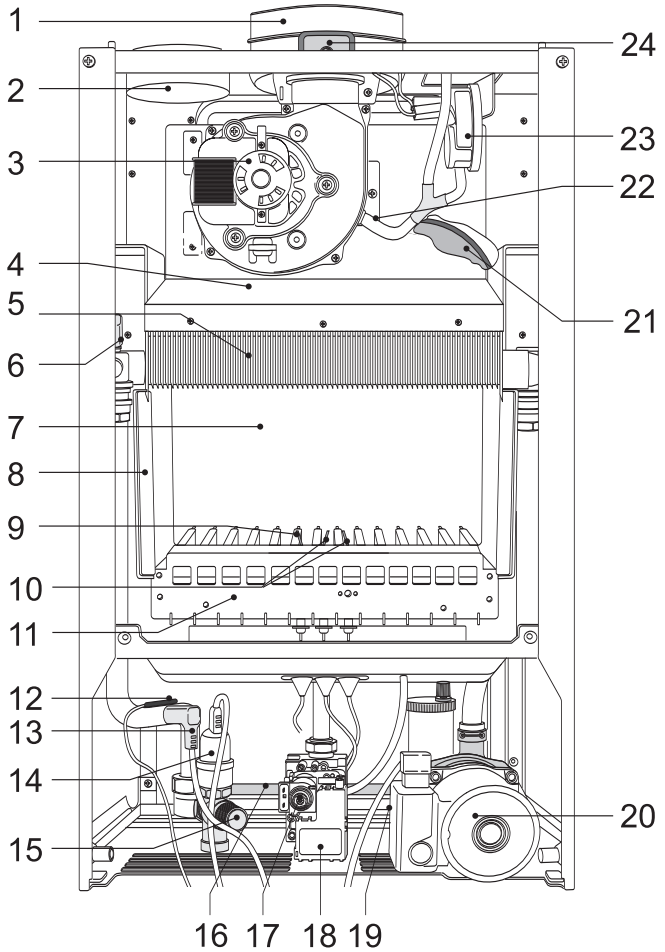

1.2 OVERALL VIEW

LEGEND:

1. Flue connector
2. Air intake for twin pipe flue systems
3. Fan
4. Combustion chamber hood
5. Main heat exchanger
6. Safety thermostat
7. Combustion chamber
8. Combustion chamber insulation panel
9. Detection electrode
10. Ignition electrodes
11. Burner
12. Regulation thermostat
13. Frost thermostat
14. Pump pressure switch
15. Safety valve (3 bar)
16. Automatic By-pass
17. Gas valve
18. Spark generator
19. Boiler drain valve
20. Circulation pump with automatic air release valve
21. Expansion vessel
22. Air pressure take-off point
23. Air pressure switch
24. Combustion analysis points

2. INSTALLATION

The technical information and instructions provided herein below are intended for the installer / Servicing Technician so that the unit may be installed and serviced correctly and safely.

2.1 DELIVERY

There will be two items:
1 - The fully assembled boiler
2 - A separately boxed connection ki

2.2 REFERENCE STANDARDS

WATER REGULATIONS
In GB it is necessary to comply with the Water Supply (Water Fittings) Regulations 1999, for Scotland, The Water Bylaws 2000, Scotland. The Genus 30 Plus is an approved product under the Water Regulations.

To comply with the Water Regulations, you attention is drawn to The Water Regulations guide published by the Water Regulations Advisory Scheme (WRAS) gives full details of the requirements.

In IE, the requirements given in the current edition of I.S.813 and the current Building Regulations must be followed.

The installation of this appliance must be in accordance with the relevant requirements of the Local Building Regulations, the current I.E.E. Wiring Regulations, the bylaws of the local water authority, in Scotland, in accordance with the Building Standards (Scotland) Regulation and Health and Safety document No. 635 “Electricity at work regulations 1989” and in the Republic of Ireland with the current edition of I.S. 813, the Local Building Regulations (IE).

C.O.S.H.H.
Materials used in the manufacture of this appliance are non-hazardous and no special precautions are required when servicing.

Installation should also comply with the following British Standard Codes of Practice:

BS 7593	**Treatment of water in domestic hot water central heating systems**
BS 5546	**Installation of hot water supplies for domestic purposes**
BS 5440-1	**Flues**
BS 5440-2	**Air supply**
BS 5449	**Forced circulation hot water systems**
BS 6798	**Installation of gas fired hot water boilers of rated input not exceeding 60kW**
BS 6891	**Installation of low pressure gas pipe up to 28mm**
BS 7671	**IEE wiring regulations**
BS 7074	**Specification for expansion vessels**
BS 5482	**Installation of L.P.G.**

and in the Republic of Ireland in accordance with the following Codes of Practice:

I.S. 813	**Domestic Gas Installations**

The following BS Standards give valuable information;

BS 5546	**Installation of hot water supplies for domestic purposes**
BS 5449	**Forced circulation hot water systems**
BS 7074	**Specification for expansion vessels**
BS 7593	**Treatment of water in domestic hot water central heating systems**

Downloaded From www.Gas101.Co.Uk

WARNING!!
The addition of anything that may interfere with the normal operation of the appliance without express written permission of the manufacturer or his agent could invalidate the warranty. In GB this could also infringe the **GAS SAFETY(Installation and Use) REGULATIONS**.

In the Republic of Ireland the installation and initial start up of the appliance must be carried out by a Competent Person in accordance with the current edition of I.S.813 "Domestic Gas Installations", the current Building Regulations, reference should also be made to the current ETCI rules for electrical installation.

2.3 Siting the Appliance

The appliance may be installed in any room or indoor area, although particular attention is drawn to the requirements of the current I.E.E. Wiring Regulations, in Scotland, the electrical provisions of the Building Regulations applicable in Scotland, and in the Republic of Ireland, the current edition of I.S.813, with respect to the installation of the combined appliance in a room containing a bath or shower. The location of the boiler in a room containing a bath or shower should only be considered if there is no alternative.

Where a room-sealed appliance is installed in a room containing a bath or shower reference should be made to the relevant requirements.

In GB this is the current I.E.E. WIRING REGULATIONS and BUILDING REGULATIONS. In IE reference should be made to the current edition of I.S.813 and the current ETCI rules.

If the boiler is to be sited into a timber framed building, reference must be made to the current edition of the Institution of Gas Engineers Publication IGE/UP/7 (Gas Installations in Timber Framed Housing).

The location must permit adequate space for servicing and air circulation around the appliance as indicated in Section 2.5.
The location must permit the provision of an adequate flue and termination.
For unusual locations special procedures may be necessary.
BS 6798-1987 gives detailed guidance on this aspect.
A compartment used to enclose the appliance must be designed specifically for this purpose. No specific ventilation requirements are needed for the installation within a cupboard.

This appliance is not suitable for outdoor installation.

The type C appliances (in which the combustion circuit, air vent intake and combustion chamber are air-tight with respect to the room in which the appliance is installed) can be installed in any type of room.

Secondary ventilation is not required with this boiler. The boiler must be installed on a solid, non-combustible, permanent wall to prevent access from the rear.

Downloaded From www.Gas101.Co.Uk

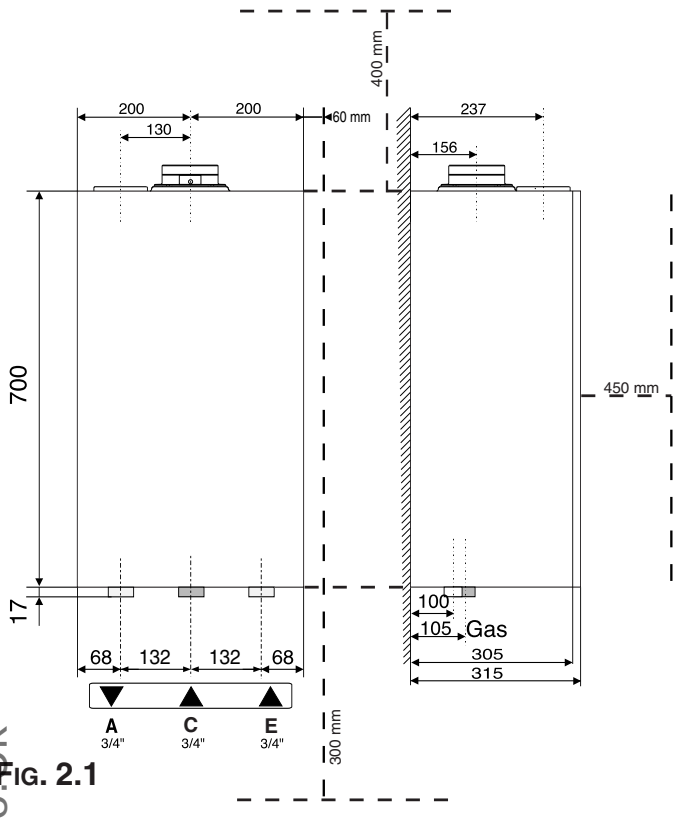

Fig. 2.1

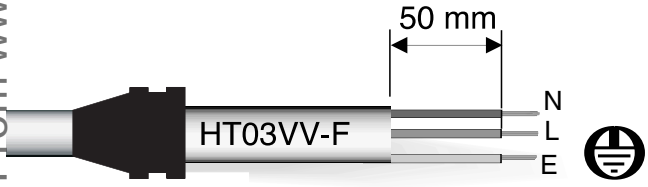

Fig. 2.2

2.4 Overall Dimensions

Legend:

A = Central Heating Flow (3/4")
C = Gas Inlet (3/4")
E = Central Heating Return (3/4")
mm = Clearances

2.5 Clearances

In order to allow for access to the interior of the boiler for maintenance purposes, the boiler must be installed in compliance with the minimum clearances indicated in **Fig. 2.1**

2.6 Mounting the Appliance

Fasten the boiler in place using the template and anchors supplied with the unit. It is highly recommended that a spirit level be used to position the boiler so that it is perfectly level.
For additional information, please consult the instructions contained in the connection kit and the flue kit.

2.7 Electrical Connection

For safety purposes, have a competent person carefully check the electrical system in the property, as the manufacturer will not be held liable for damage caused by the failure to earth the appliance properly or by anomalies in the supply of power. Make sure that the residential electrical system is adequate for the maximum power absorbed by the unit, which is indicated on the rating plate. In addition, check that the section of cabling is appropriate for the power absorbed by the boiler.

The boiler operates with alternating current, as indicated in the technical information table in section 7, where the maximum absorbed power is also indicated. Make sure that the connections for the neutral and live wires correspond to the indications in the diagram. The appliance electrical connections are situated on the reverse of the control panel under the inspection cover (see the servicing manual for further information)

Important!
In the event that the power supply cord must be changed, replace it with one with the same specifications. Make the connections to the terminal board located within the control panel, as follows:
- The yellow-green wire should be connected to the terminal marked with the " ⏚ " symbol;
- The blue wire should be connected to the terminal marked **"N"**;
- The brown wire should be connected to the terminal

Downloaded From www.Gas101.Co.Uk

marked **"L"**.
Note: The diagrams for the electrical system are indicated in section 2.12.

Warning, this appliance must be earthed.
External wiring must be correctly earthed, polarised and in accordance with relevant regulations / rules. In GB this is the current I.E.E. WIRING REGULATIONS. In IE reference should be made to the current edition of the ETCI rules. This boiler is supplied for connection to a 220 - 240 V~ 50 Hz supply.

The supply must be fused at 3 A.
The method of connection to the electricity supply must facilitate complete electrical isolation of the appliance, by the use of a fused double pole isolator having a contact separation of at least 3 mm in all poles or alternatively, by **means of a 3 A** fused three pin plug and unswitched shuttered socket outlet both complying with BS 1363.
The point of connection to the Electricity supply must be readily accessible and adjacent to the appliance unless the appliance is installed in a bathroom when this must be sited outside the bathroom (see section 2.3).

2.8 Gas Connection

The local gas region contractor connects the gas meter to the service pipe. The gas installation should be in accordance with the relevant standards. In GB this is BS6891 and in IE this is the current edition of I.S.813. The connection the the appliance is a 22mm copper tail located at the rear of the gas service cock (**Fig. 2.3**). If the gas supply for the boiler serves other appliances ensure that an adequate supply is available both to the boiler and the other appliances when they are in use at the same time. Pipe work must be of an adequate size. Pipes of a smaller size than the boiler inlet connection should not be used.

2.9 Water Connections

Fig. 2.4

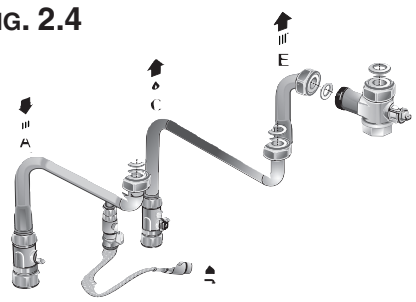

View of the Boiler Connections

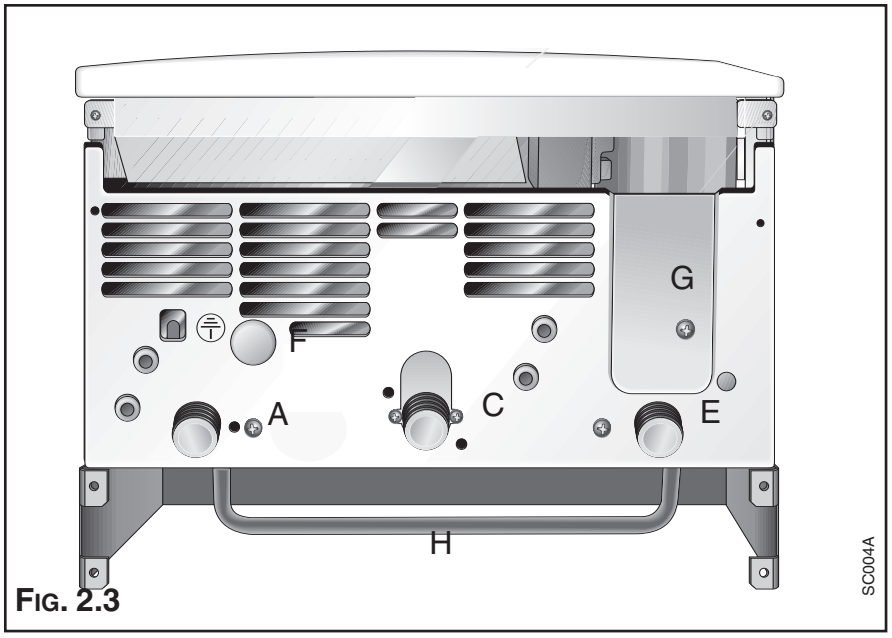

Fig. 2.3

Legend:

A = Central Heating Flow
C = Gas Inlet
E = Central Heating Return
F = Safety Valve
G = Pump transportation screw
(remove before igniting the boiler)
H = Automatic By-pass pipe

Downloaded From www.Gas101.Co.Uk

Downloaded From www.Gas101.Co.Uk

Central Heating

Detailed recommendations are given in BS 6798:1987 and BS 5449-1:1990, the following notes are given for general guidance.

Pipe Work

Copper tubing to BS EN 1057:1996 is recommended for water pipes. Jointing should be either with capillary soldered or compression fittings.

Where possible pipes should have a gradient to ensure air is carried naturally to air release points and water flows naturally to drain taps.

The appliance has a built-in automatic air release valve, however it should be ensured as far as possible that the appliance heat exchanger is not a natural collecting point for air.

Except where providing useful heat, pipes should be insulated to prevent heat loss and avoid freezing.

Particular attention should be paid to pipes passing through ventilated spaces in roofs and under floors.

By-pass

The appliance includes an automatic by-pass valve, which protects the main heat exchanger in case of reduced or interrupted water circulation through the heating system, due to the closing of thermostatic valves or cock-type valves within the system.

System Design

This boiler is suitable only for sealed systems.

Drain Cocks

These must be located in accessible positions to permit the draining of the whole system. The taps must be at least 15mm nominal size an manufactured in accordance with BS 2870:1980.

Safety Valve Discharge (Primary Water)

The discharge should terminate facing downwards on the exterior of the building in a position where discharging (possibly boiling water & steam) will not create danger or nuisance, but in an easily visible position, and not cause damage to electrical components and wiring.

The discharge must not be over an entrance or a window or any other type of public access.

Mains Water Feed - Central Heating

There must be no direct connection to the mains water supply even through a non-return valve, without the approval of the Local Water Authority, and must be in accordance with water supply regulations. Your attention is drawn to, for GB: Guidance G24.2 and recommendation R24.2 of the water regulations guide and for IE: the current edition of I.S.813.

Filling

A temporary method for initially filling the system and replacing lost water during servicing and initial filling (complying to current water regulations and byelaws) is provided. The flexible hose must be removed once the system has been filled.

Residual Head of the Boiler

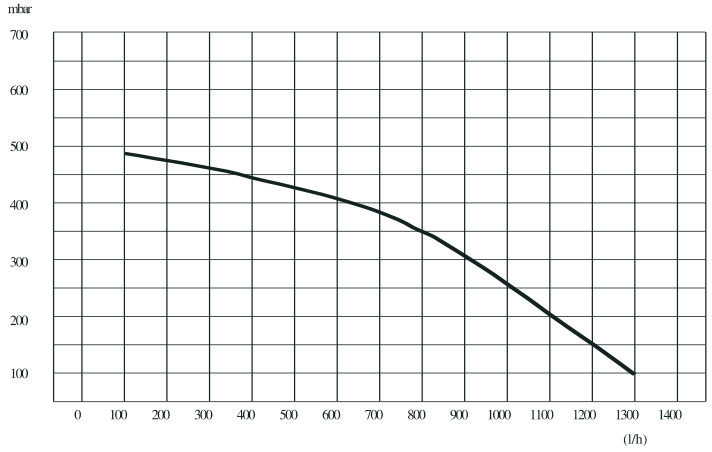

2.10 Flue Connections

Flue System

The provision for satisfactory flue termination must be made as described in BS 5440-1, for IE recommendations I.S.813.

The appliance must be installed so that the flue terminal is exposed to outdoor air, consideration must be given to terminal discharges onto a pathway or passageway, check that the combustion discharges will not cause a nuisance and that the terminal will not obstruct the passageway.

The terminal must not discharge into another room or space such as an outhouse or lean-to.

It is important that the position of the terminal allows a free passage of air across it at all times.

If the terminal is fitted within 1 metre of a plastic gutter, within 500mm of a painted eave or a painted gutter, an aluminium shield of at least 1 metre long should be fitted to the underside of the gutter or painted surface. An air space of 5mm should be left between shield and gutter.

The terminal should be located with due regard for the damage or discolouration that might occur on buildings in the vicinity.

In cold or humid weather water vapour may condense on leaving the flue terminal. The effect of such "steaming" must be considered.

If the terminal is less than 2 metres above a balcony, above ground or above a flat roof to which people have access, then a suitable terminal guard must be fitted. When ordering a terminal guard, quote the appliance model number.

A suitable terminal guard is available from:
TOWER FLUE COMPONENTS
Morley Road
Tonbridge
Kent TN9 1RA

The minimum acceptable spacing from the terminal to obstructions and ventilation openings are specified in **Fig. 2.5**.

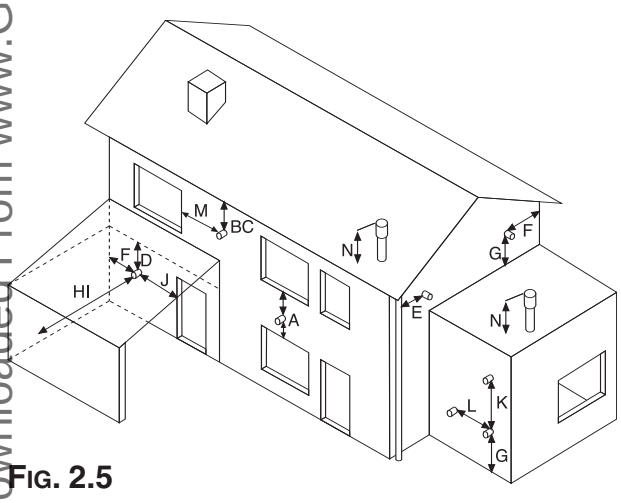

Fig. 2.5

Terminal Position		mm
A -	Directly above or below an openable window or other opening	300
B -	Below gutters, solid pipes or drain pipes	75
C -	Below eaves	200
D -	Below balconies or car-port roof	200
E -	From vertical drain pipes and soil pipes	150
F -	From internal or external corners	300
G -	Above ground or balcony level	300
H -	From a surface facing a terminal	600
I -	From a terminal facing a terminal	1200
J -	From an opening in the car port (e.g. door, window) into dwelling	1200
K -	Vertically from a terminal in the same wall	1500
L -	Horizontally from a terminal in the same wall	300
M -	Horizontally from an opening window	300
N -	Fixed by vertical flue terminal	

The boiler is designed to be connected to a coaxial flue discharge system.

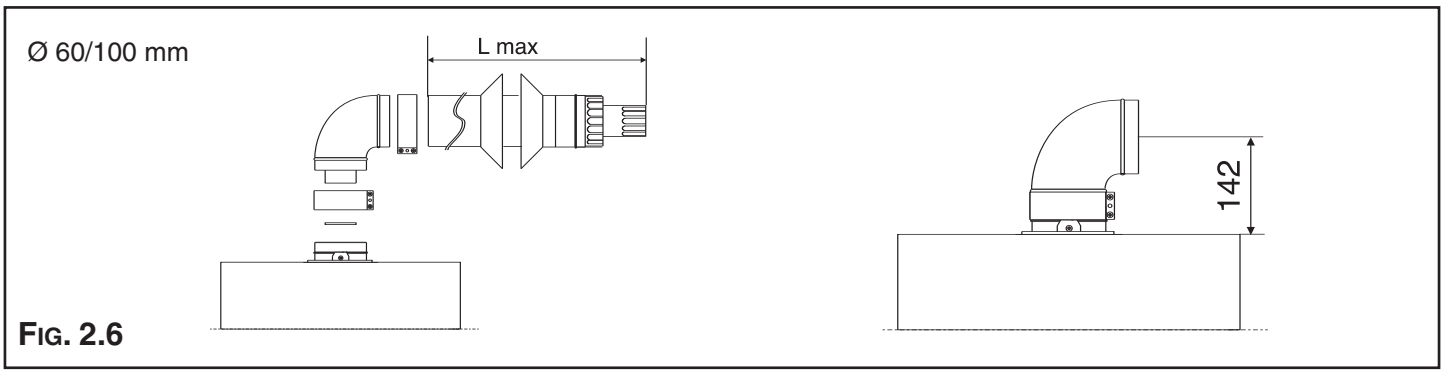

Fig. 2.6

Downloaded From www.Gas101.Co.Uk

In addition, it is also possible to use a split (twin pipe) system by fitting a special adaptor to the flue connector and using the aperture for the air vent intake located on the top part of the combustion chamber.
To utilise the air intake it is necessary to:
1. Remove the bottom of the air intake by cutting it with a suitable knife (see **Fig. 2.7**);
2. Insert the elbow into the air intake until it reaches the lower end. (There is no need to use gaskets or sealing compounds).

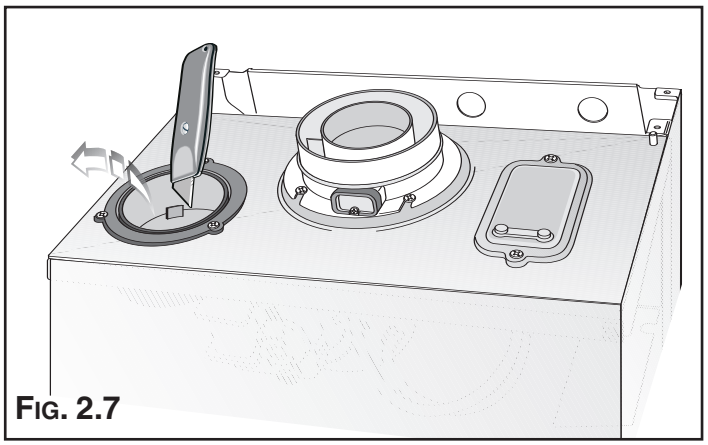

Fig. 2.7

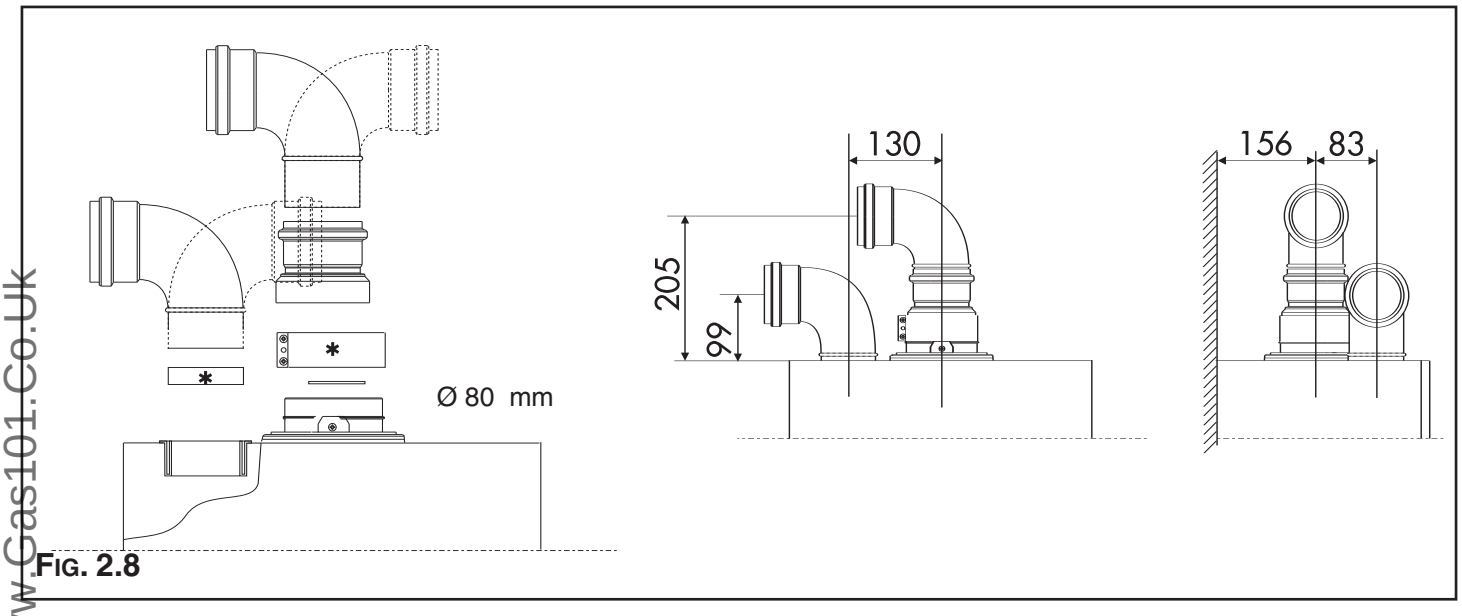

Fig. 2.8

Downloaded From www.Gas101.Co.Uk

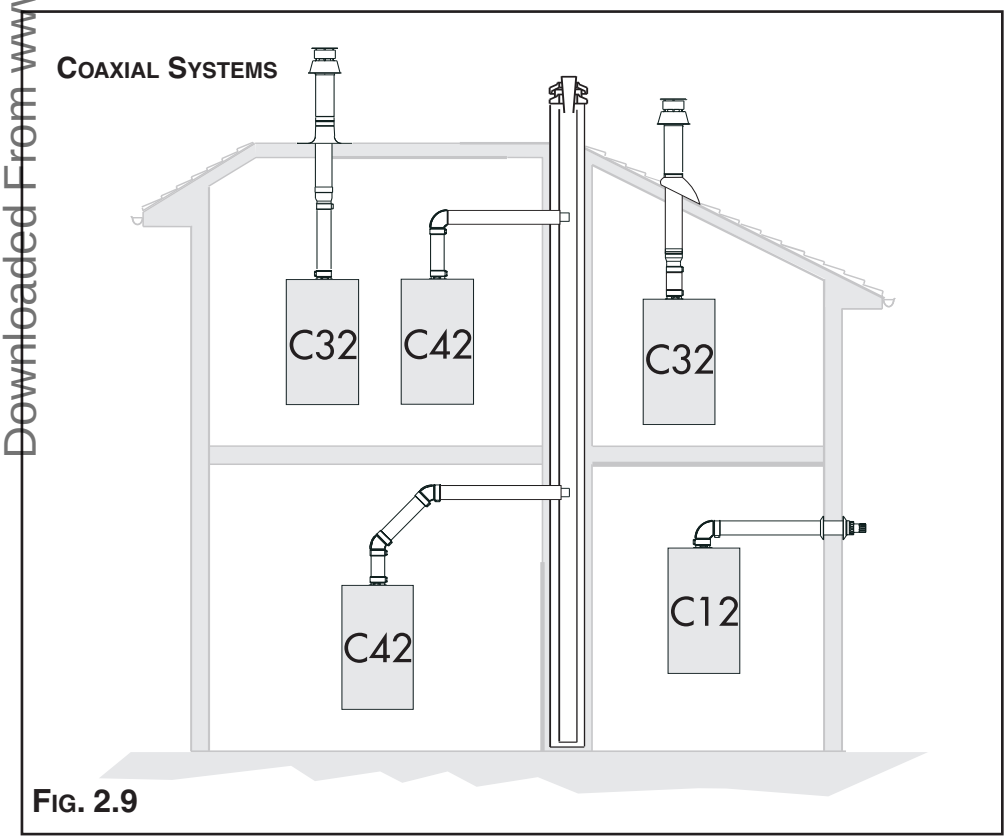

Fig. 2.9

Important!

For all flue systems, a restrictor must always be inserted into the boiler's flue connector; the restrictor must be Ø 46 or Ø 41 in diameter depending on the length of piping indicated in Table 2.1.

Fig 2.9 and **Fig 2.10** illustrate some of the various designs for coaxial or twin pipe flue systems.
For further information on discharge/ventilation accessories, see the **Flue Pipe Accessories Manual**.

TABLE 2.1

micro SYSTEM 21 RFFI	Exhaust Type	Restrictor ø 46 mm	Maximum Extension Exhaust/Air	Risk of Condensation Forming			
				Piping not insulated		Piping insulated	
				ø 46 restrictor	NO restrictor	ø 46 restrictor	NO restrictor
Coaxial Systems ø 60/100	C12 (xx) C32 (xx) C42 (xx)	L min = 0.5 m L max = 1 m	L = 4 m	NONE	NONE	NONE	NONE

micro SYSTEM 28 RFFI	Exhaust Type	Restrictor ø 41 mm	Maximum Extension Exhaust/Air	Risk of Condensation Forming			
				Piping not insulated		Piping insulated	
				ø 41 restrictor	NO restrictor	ø 41 restrictor	NO restrictor
Coaxial Systems ø 60/100	C12 (xx) C32 (xx) C42 (xx)	L min = 0.5 m L max = 1 m	L = 4 m	NONE	NONE	NONE	NONE

micro SYSTEM 21 RFFI	Exhaust Type	Restrictor ø 46 mm	Maximum Extension Exhaust/Air	Risk of Condensation Forming			
				Piping not insulated		Piping insulated	
				ø 46 restrictor	NO restrictor	ø 46 restrictor	NO restrictor
Twin Pipe Systems ø 80/80	C12 (xy) C32 (xy) C42 (xy)	L max = 25 m	34 m 34 m 34 m	3.0 m	4.5 m	12.5 m	16.0 m
	C52 (xy) C82 (xy)	L max = 22 m	31 m	3.3 m	4.8 m	14.0 m	17.8 m

micro SYSTEM 28 RFFI	Exhaust Type	Restrictor ø 41 mm	Maximum Extension Exhaust/Air	Risk of Condensation Forming			
				Piping not insulated		Piping insulated	
				ø 41 restrictor	NO restrictor	ø 41 restrictor	NO restrictor
Twin Pipe Systems ø 80/80	C12 (xy) C32 (xy) C42 (xy)	L max = 38 m	62 m 62 m 62 m	8 m	11 m	19 m	31 m
	C52 (xy) C82 (xy)	L max = 34 m	54 m	8 m	11 m	19 m	31 m

L = Sum of the total length of exhaust + air intake piping.

Downloaded From www.Gas101.Co.Uk

TWIN PIPE SYSTEMS

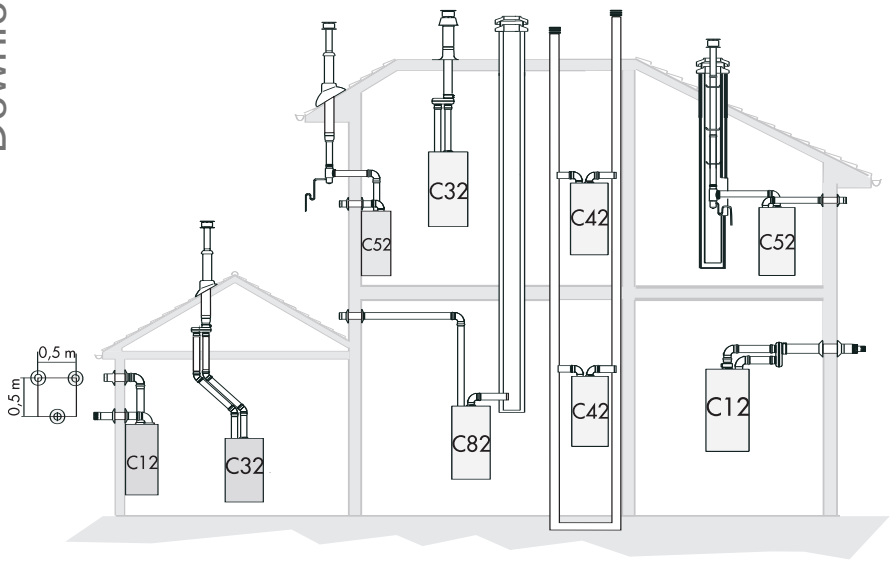

FIG. 2.10

In calculating the lengths of the pipes, the maximum length "L" must also take into consideration the values for the exhaust/air intake end terminals, as well as 90° elbows for coaxial systems.

The C52 types must comply with the following requirements:

1 - The exhaust/ air intake pipes must have the same diameter of ø 80 mm.

2 - If elbows are to be inserted into the air intake and/or exhaust system, the calculation of the overall length must take into consideration the values for each elbow, see the **FLUE PIPE ACCESSORIES MANUAL**.

3 - The exhaust pipe must protrude by at least 0.5 m above the top of the roof in the event that it is located on the opposite side of the building to the side with the air intake (this condition is not obligatory when the air intake and exhaust are located on the same side of the building).

2.11 Room Thermostat Connection

To connect a room thermostat and/or time clock, it is necessary to:

1. - Open the control panel as indicated in section 4.3;
2.- Remove screws **"A"** and remove the inspection cover from the reverse of the control panel;
3. - For the room-thermostat connect the thermostat switching wires to the position 5 and 6 and remove the wire link (for three-wire thermostats connect the neutral to terminal **N**);
4. - For the time clock connect the clock switching wires to the positions 3 and 4 and connect the clock motor electrical supply to the terminals marked **L** and **N**.

Note: A frost thermostat is built-in to the appliance.

For connection to control systems with zone valves for hot water cylinders see section 3.

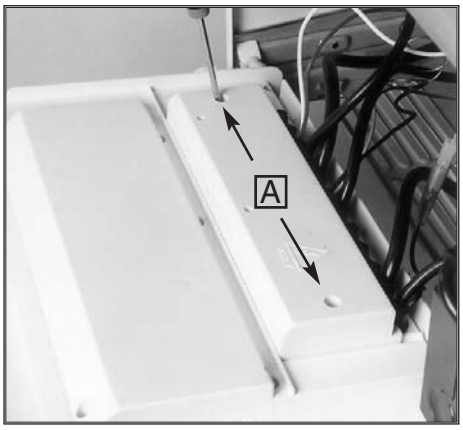

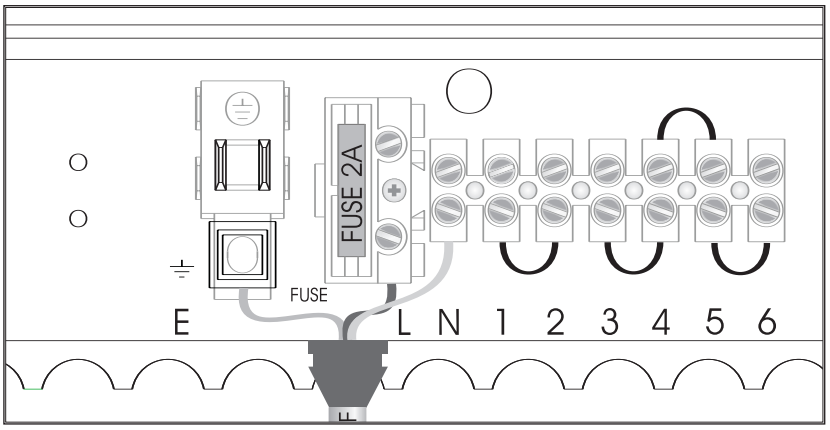

Downloaded From www.Gas101.Co.Uk

2.12 Electrical Diagram

Legend:

A - On/Off Switch
B - On/Off L.E.D.
C - Heating Switch
D - Heating L.E.D.
E - Reset Button
F - Ignition Failure (Lockout) L.E.D.

A01 - Pump Pressure Switch
A02 - Frost Thermostat
A03 - Modulator
A04 - Circulation Pump
A05 - Regulation Thermostat
A06 - External Control System
A07 - Time Clock Connector
A08 - External (Room) Thermostat
A09 - Air Pressure Switch
A10 - Fan
A11 - Overheat Thermostat
A12 - Spark Generator/Gas Valve Supply
A13 - Detection Electrode

Colours:
Wh -White
Bl -Blue
Gry -Grey
Brn -Brown
Blk -Black
Rd -Red
Grn/Yll -Yellow/Green

Downloaded From www.Gas101.Co.Uk

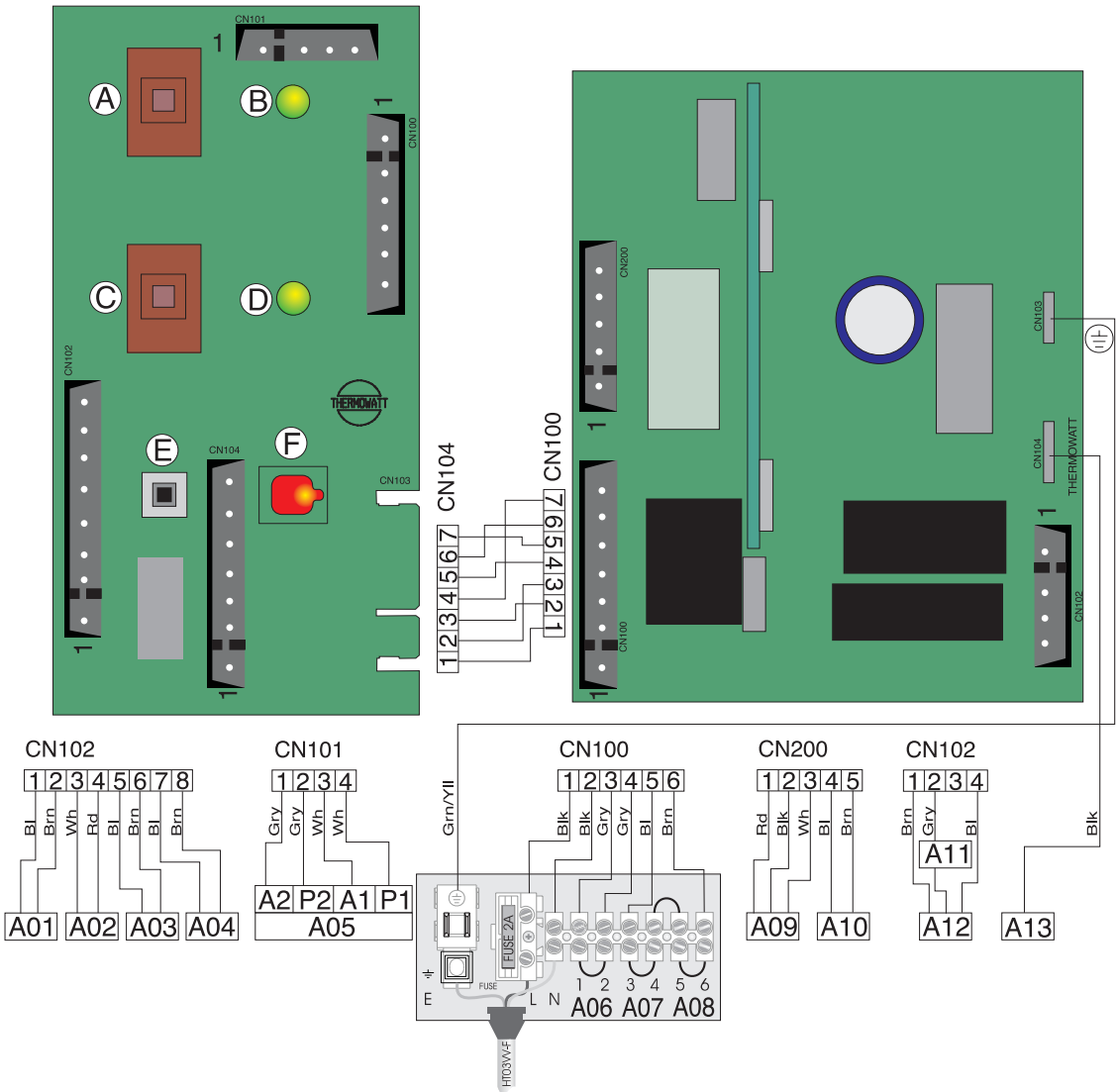

Fig. 2.12

FIG. 2.13

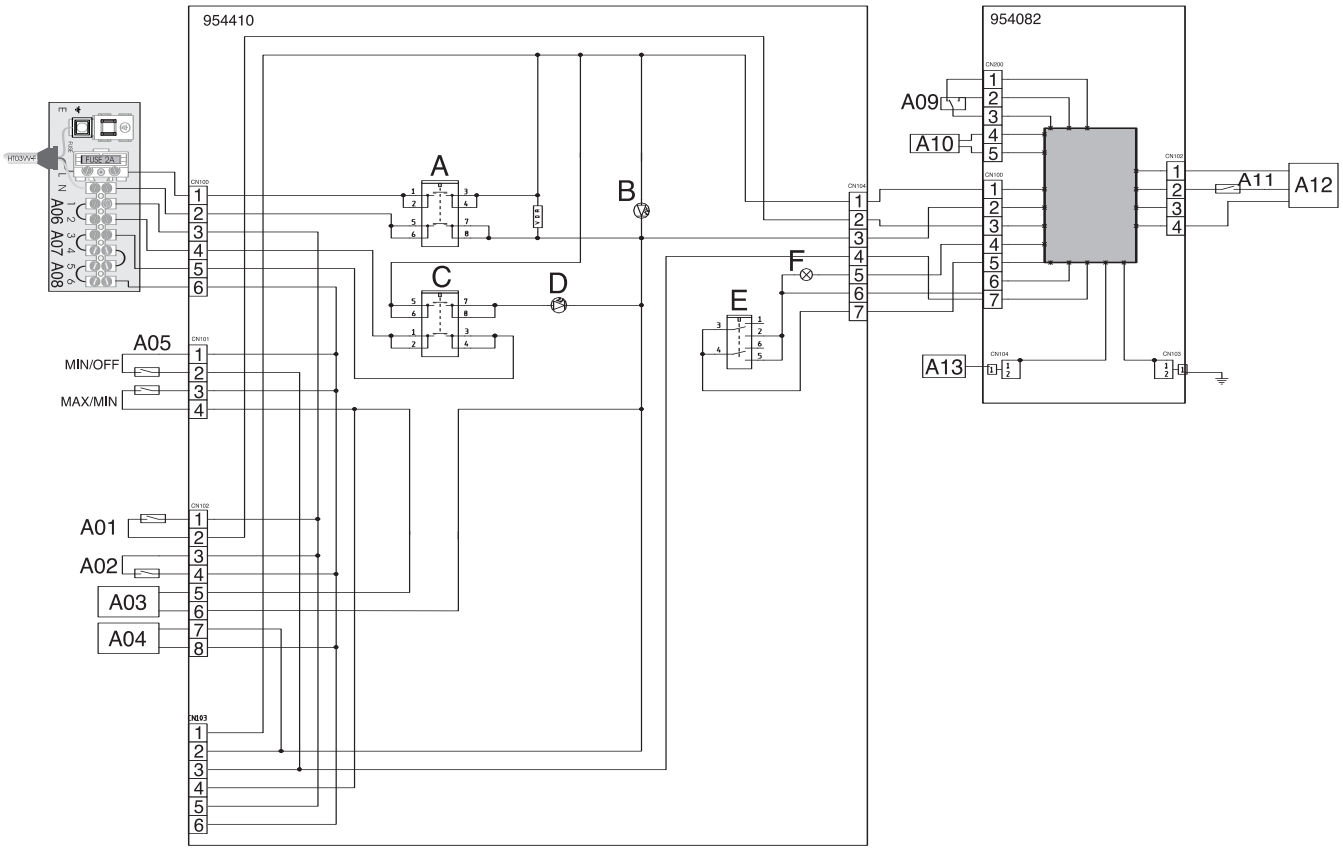

2.13 GAS AND WATER CIRCUITS

FIG. 2.14

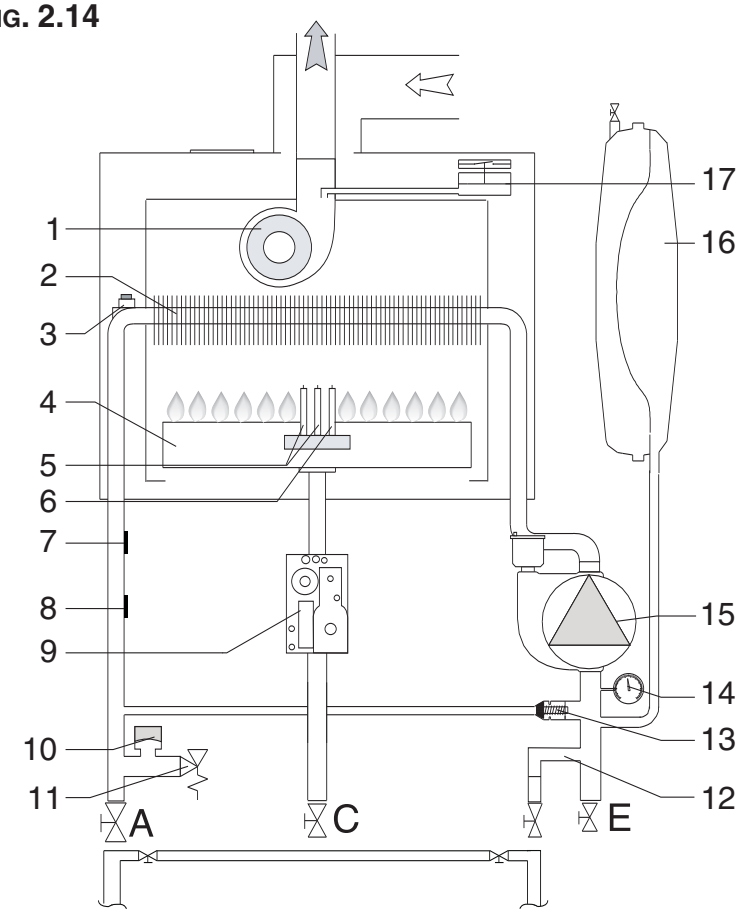

LEGEND:

1. Fan
2. Main heat exchanger
3. Overheat thermostat
4. Burner
5. Ignition electrodes
6. Detection electrode
7. Regulation thermostat
8. Frost thermostat
9. Gas valve
10. Pump pressure switch
11. Safety valve (3 bar)
12. Boiler drain valve
13. Automatic by-pass
14. Pressure gauge
15. Circulation pump with automatic air release valve
16. Expansion vessel
17. Air pressure switch

A. Central Heating Flow
C. Inlet Gas
E. Central Heating Return

Downloaded From www.Gas101.Co.Uk

3. D.H.W. STORAGE CYLINDER

The microSYSTEM can be connected to a storage cylinder (both open-vented and unvented) for the production of domestic hot water (D.H.W.). Cylinders of different capacities can be used depending on site requirements (see **TABLE 3.1** for a selection of ARISTON unvented cylinders).

3.1 2 PORT AND 3 PORT VALVE INSTALLATIONS

2 port valve installation

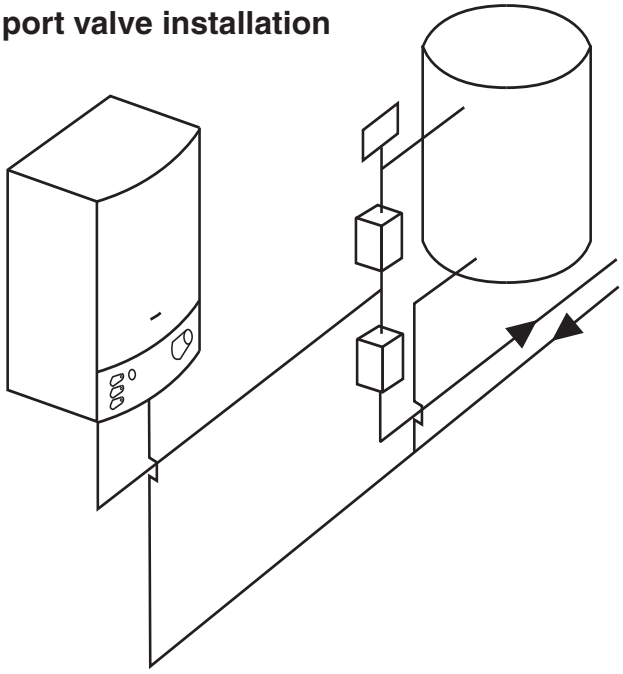

FIG. 3.1

3 port valve installation

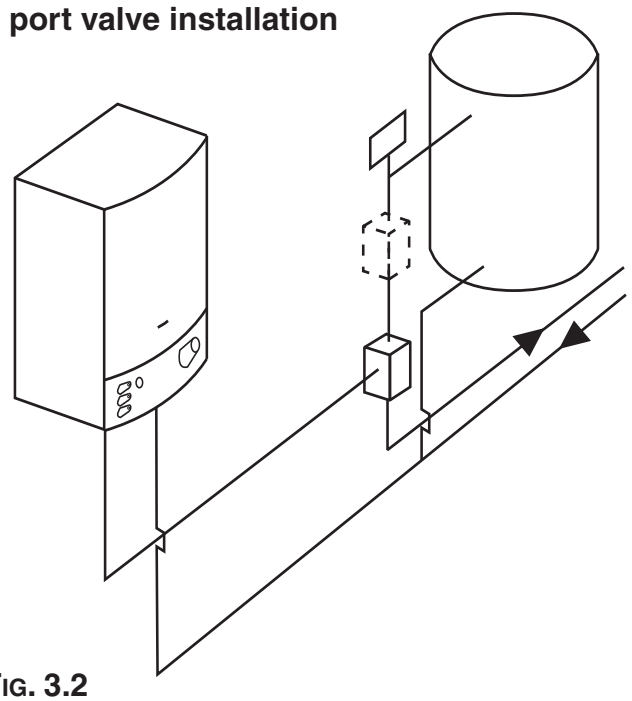

FIG. 3.2

FIG. 3.3

Wiring to 2 port valve installation using an external 2 channel programmer
Type Danfoss FP715
Type Honeywell ST6400C

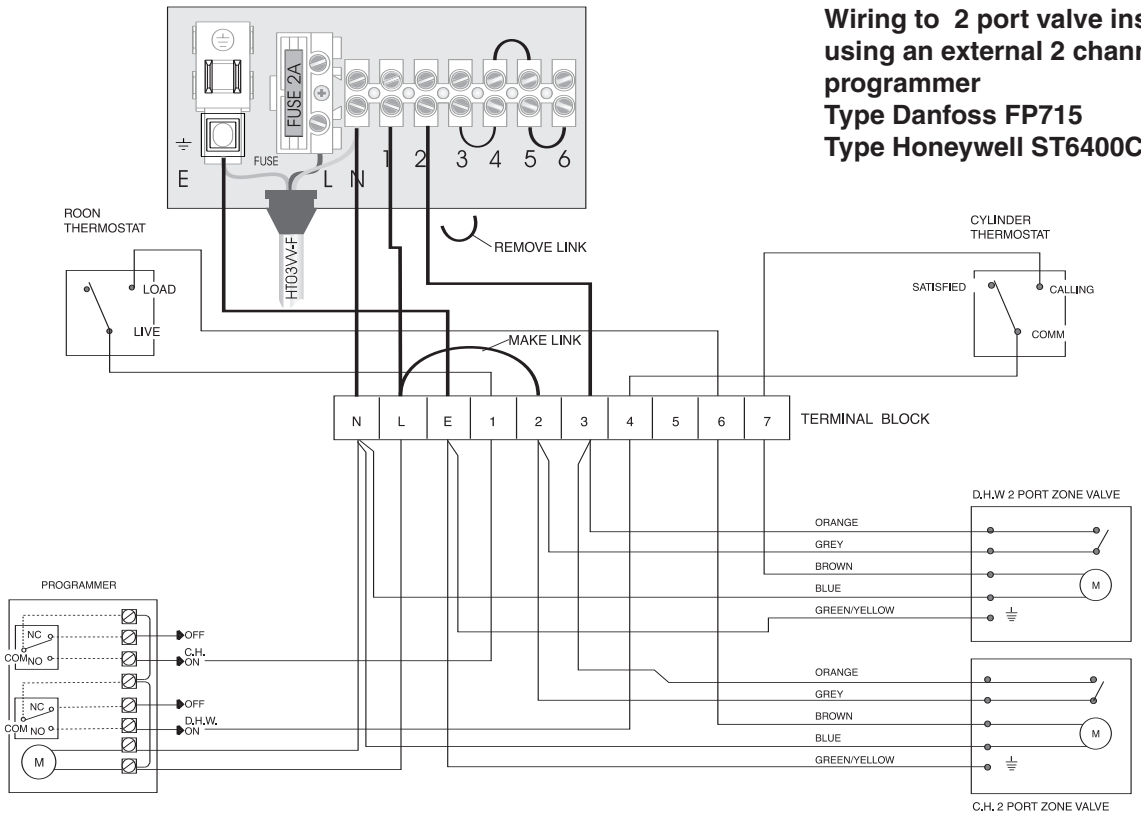

Downloaded From www.Gas101.Co.Uk

Wiring to 3 port valve installation using an external 2 channel programmer
Type Danfoss FP715
Type Honeywell ST6400C

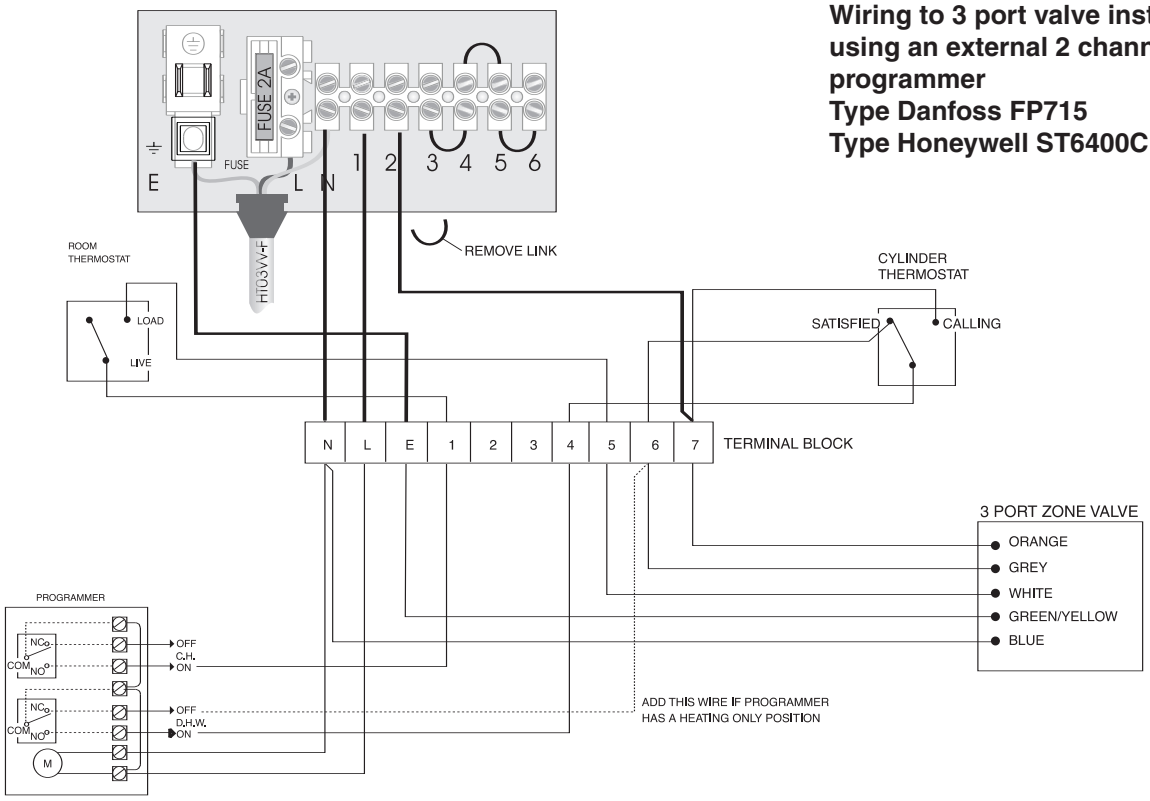

FIG. 3.4

NOTE: When using a 3 port valve installation in conjunction with an unvented cylinder it will be necessary to use a 2 port valve on the cylinder flow connection in addition to the 3- port valve to satisfy Building Regulations.

TABLE 3.1

Technical Data / MODEL	Capacity lt.	Coil Surface m²	C.H.W. Flow/rate m³/h	D.H.W. Flow/rate lt/h	Max Heating Output kW	Heat loss kWh/24h
Contract STI 125 Indirect	125	0.75	0.5 1 2	194 266 340	11.3 15.5 19.8	2
Comfort STI 125 Indirect **Contract STI 150 Indirect**	125 150	0.75 0.93	0.5 1 2	256 353 451	14.9 20.5 26.2	2.2
Comfort STI 150 Indirect **Contract STI 210 indirect**	150 200	0.93 0.93	0.5 1 2	256 353 451	14.9 20.5 26.2	2.4
Comfort STI 210 Indirect **Contract STI 300 Indirect**	200 300	0.93 0.93	0.5 1 2	256 353 451	14.9 20.5 26.2	2.9
SB 125 Indirect	125	1	0.5 1 2	190 318 496	11 18.5 28.8	1.72
SB 150 Indirect	150	1	0.5 1 2	190 318 496	11 18.5 28.8	1.75
SB 200 Indirect	200	1.3	0.5 1 2	190 318 496	11 18.5 28.8	2.1

Downloaded From www.Gas101.Co.Uk

3.2 Domestic Hot Water Priority Kit

Cylinder \ Boiler	microSYSTEM 21 RFFI	microSYSTEM 28 RFFI
Contract STI 125 Indirect	▫	
Comfort STI 125 Indirect	▫	
Contract STI 150 Indirect	●	▫
Comfort STI 150 Indirect	●	▫
Contract STI 210 Indirect	●	●
Comfort STI 210 Indirect	●	●
Contract STI 300 Indirect	▫	●
SB 125 Indirect	▫	
SB 150 Indirect	●	●
SB 200 Indirect	●	●

Table 3.2

● = Ideal

▫ = Possible

The *microSYSTEM* is able to be connected to a specially designed kit for the management of D.H.W. production. This kit gives priority to production of D.H.W. unlike traditional systems where the boiler power is split between C.H. and D.H.W. This generally enables a smaller storage cylinder to be chosen as the boiler's full output will be channelled into the cylinder allowing for a quick heat-up.

The kit (ARISTON part number 706329) can be obtained from an ARISTON supplier.

The kit consits of:
1) Electronic module able to plug into the boiler's P.C.B;
2) 3-way priority valve with actuator for connection to the boiler's flow outlet;
3) A limit thermostat (80˚C) to check the water temperature of the heating flow to the cylinder, to be installed within the boiler;
4) Pipes and accessories.

4. COMMISSIONING

MTS support the benchmark initiative. Within the information pack you will find a copy of the benchmark Log Book. It is important that this is completed in the presence of your customer, they are shown how to use it, and it is signed by them. Please instruct your customer that they must have their benchmark Log Book with them whenever they contact a service engineer or us.

Preliminary electrical system checks to ensure electrical safety must be carried out by a competent person i.e. polarity, earth continuity, resistance to earth and short circuit.

4.1 Initial Preparation

Filling the Heating System:

Remove the panels of the case and lower the control panel (see section 3.3 for further information).
Open the central heating flow and return cocks supplied with the connection kit (there are two isolation points on the return connection).
Unscrew the cap on the automatic air release valve one full turn and leave open permanently.
Close all air release valves on the central heating system.
Gradually open valve(s) at the filling point (filling-loop) connection to the central heating system until water is heard to flow, do not open fully.
Open each air release tap starting with the lowest point and close it only when clear water, free of air, is visible.
Purge the air from the pump by unscrewing anticlockwise and removing the pump plug and also manually rotate the pump shaft in the direction indicated by the pump label to ensure the pump is free.
Refit the pump plug.
Continue filling the system until at least 1.5 bar registers on the pressure gauge.
Inspect the system for water leaks and remedy any leaks discovered.

Gas Supply:

Inspect the entire installation including the gas meter and test for soundness. The gas installation should be in accordance with the relevant standards. In GB this is BS6891 and in IE this is the current edition of I.S.813.

Downloaded From www.Gas101.Co.Uk

If the gas supply for the boiler serves other appliances ensure that an adequate supply is available both to the boiler and the other appliances when they are in use at the same time.
Pipe work must be of an adequate size. Pipes less than the 22mm should not be used.
Open the gas cock (supplied with the connection kit) to the appliance and check the gas connections on the appliance for leaks.
When the installation and filling are completed, flush the system while cold, refill, turn on the Central Heating system (Section 4.4) and run it until the temperature has reached the boiler operating temperature.
The system must then be immediately flushed through.
The flushing procedure must be in line with BS 7593:1992 code of practice for treatment of water in domestic hot water central heating systems.

During this operation, we highly recommend the use of a central heating flushing detergent (Fernox Superfloc or equivalent), whose function is to dissolve any foreign matter that may be in the system.
Substances different from these could create serious problems to the pump or other components.
The use of an inhibitor in the system such as Fernox MB-1 or equivalent is strongly recommended to prevent corrosion (*sludge*) damaging the boiler and system.
Failure to carry out this procedure may invalidate the appliance warranty.

For IE it is necessary to complete a "Declaration of Conformity" to indicate compliance to I.S.813. An example of this is given in the current edition of I.S.813. In addition it is necessary to complete the "Benchmark" Log Book.

Downloaded From www.Gas101.Co.Uk

4.2 Control Panel

Legend:

A - On/Off button
B - On/Off L.E.D. green (frost protection active)
C - Central Heating button
D - Cental Heating active L.E.D. green
E - Ignition failure (lockout) and/or overheat reset button
F - Ignition failure (lockout) and/or overheat L.E.D. red
G - Central heating temperature adjustment
H - Energy Saving System (ESS)
I - Knock-out for time clock
L - Heating system pressure gauge

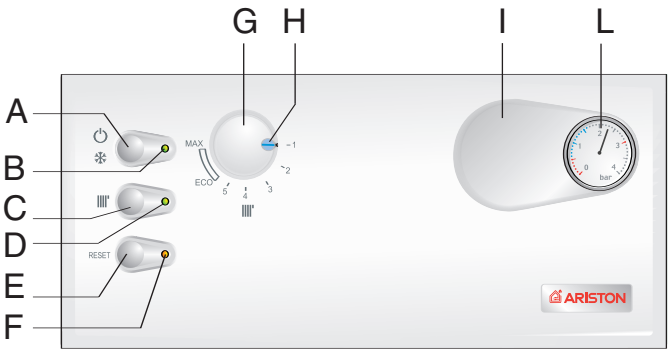

Fig. 4.1

4.3 Removing the Front Panel

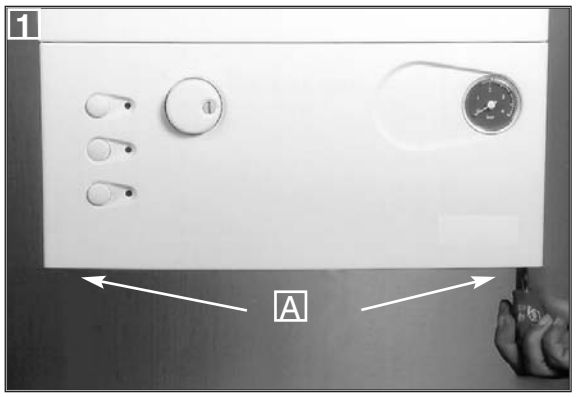

In order to access the inside of the boiler, it is necessary to unscrew the fastening screws **"A"** of the control panel located on the lower part of the panel itself.
The control panel moves downward and when pulled forward rotates on two lateral hinges.
The panel stays in a semi-horizontal position, which allows access to the inner parts of the boiler.
In order to increase the manoeuvring space, it is possible to raise the control panel and rotate it to a fully horizontal position.

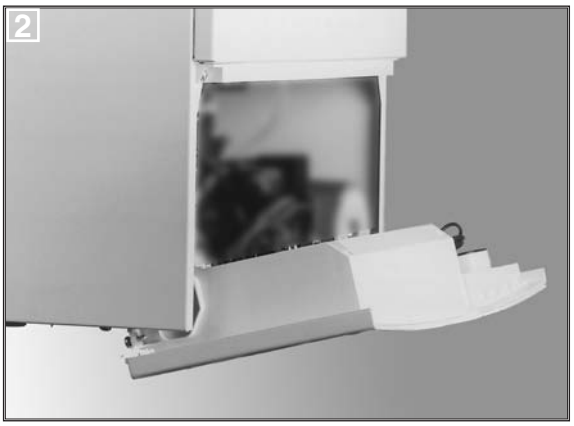

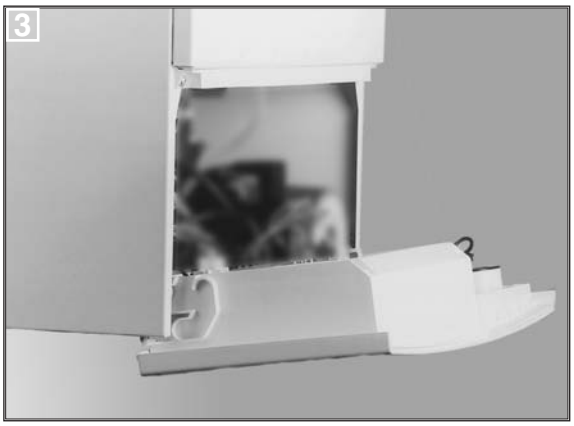

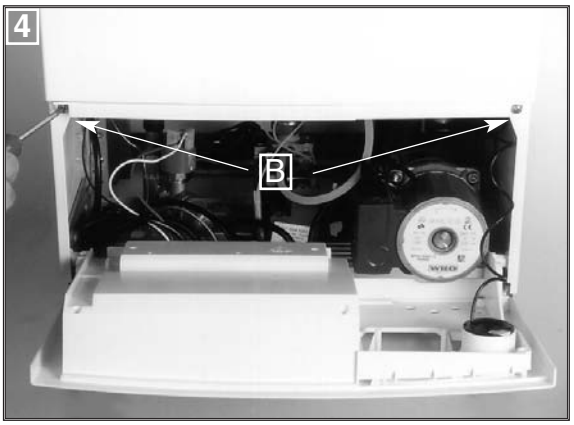

To dismantle the front casing panel it is necessary to:
1 - Remove the two screws **"B"**;
2 - Move the front casing panel up and lift forward.

4.4 Initial Start-up

The checks to be run before initial start-up are as follows:

1. Make sure that:
   - the screw on the automatic air valve has been loosened when the system is full;
   - If the water pressure in the system is below 1.5 bar, bring it up to the appropriate level;
   - Ensure that the gas cock is closed;
   - Make sure that the electrical connection has been made properly and that the earth wire is connected to an efficient earthing system;
   - Supply power to the boiler by pushing the On/Off button **"A"** (see **Fig.4.1**) - the L.E.D. **"B"** will illuminate. Then push the button **"C"** in for central heating - the L.E.D. **"D"** will illuminate. This will start the circulation pump. After 7 seconds, the boiler will signal a shutdown due to ignition failure. Leave the boiler as it is until all of the air has been bled from the system.
   - Loosen the cap on the head of the pump to eliminate any air pockets;
   - Repeat the procedure for bleeding the radiators of air;
   - Check the system pressure and, if it has dropped, open the filling loop again to bring the pressure back up to 1.5 bar.
2. Make sure that all gate valves are open;
3. Turn on the gas cock and check the seals on the connections with an approved soap solution and eliminate any leaks.
4. Press the reset button **"E"** for the lighting system; the spark will light the main burner. If the burner does not light the first time, repeat the procedure.
5. Check the minimum and maximum pressure values for the gas going to the burner; adjust it if needed using the values indicated in the table in section 5 (See the relative section for burner pressure adjustment within the servicing manual).

Downloaded From www.Gas101.Co.Uk

4.5 Combustion Analysis

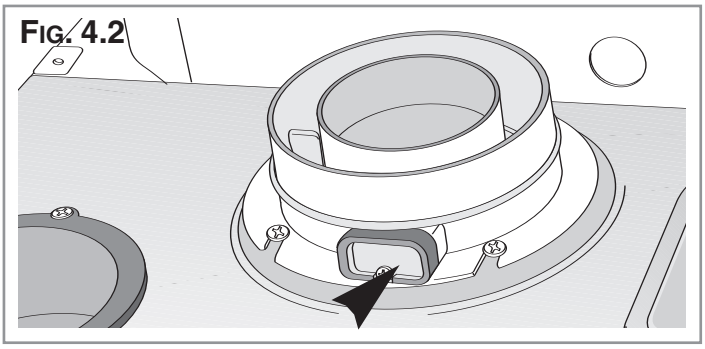
Fig. 4.2

The flue connector has two apertures, readings can be taken for the temperature of the combustion by-products and of the combustion air, as well as of the concentrations of O_2 and CO_2, etc. .

To access these intakes it is necessary to unscrew the front screw and remove the metal plate with sealing gasket.
To achieve the best test conditions, turn the central heating adjustment knob "**G**" to the "**max**" position and remove the electrical connection to the heating sensor (see section 6.). This will allow the appliance to operate at the maximum heating power.

4.6 Fume Discharge Monitoring

In the boiler, it is possible to monitor the correct operation of the flue exhaust/air intake, checking for a loss of general pressure in the system. Through the use of a differential manometer connected to the test points of the combustion chamber, it is possible to detect the ΔP of operation of the air pressure switch.
The value detected should not be less than 0.55 mbar under conditions of maximum thermal power in order for the boiler to function properly and without interruption.

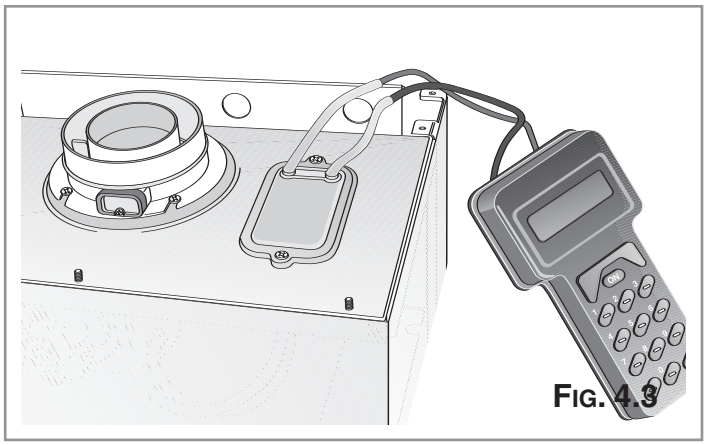
Fig. 4.3

4.7 Boiler Safety Systems

The boiler is fitted with the following devices (see section 4.2 for references).

1 - *Ignition Failure:*
This indicates ignition failure when a flame is not detected within 7 seconds of starting an ignition sequence. The L.E.D. **"F"** will illuminate to signal the shutdown status.
The system can be reset by pressing and releasing the button **"E"** after checking to make sure that the gas cock is open.

2 - *Insufficient System Pressure:*
In the event of insufficient water pressure in the heating system, a safety device will shutdown the boiler. Check the system pressure on the pressure gauge **"J"** and if it is less than 0.4 bar refill the system to 1.5 bar. Once the system pressure is at the correct level the boiler will ignite automatically.

3 - *Overheating:*
This control shuts off the boiler in the case where the primary circuit reaches a temperature in excess of 105°C.
The red L.E.D. **"F"** will illuminate to signal this shutdown status.
The system can be reset by waiting a few minutes for the primary exchanger to cool down and then by pressing and releasing the "**E**" button.

4. *Anti-frost device:*
The boiler is equipped with a device that, in the event of the water temperature going below 6°C, the burner ignites at the minimum power until the boiler water reaches a temperature of 16°C.
This device operates only if the boiler is functioning perfectly and:
- the system pressure is sufficient;
- the boiler is powered electrically - L.E.D. **"B"** illuminated;
- the gas is turned on.

5 - *Exhaust Discharge Anomaly Shutdown:*
The boiler is fitted with safety devices, which in the event of defective discharge of exhaust fumes, automatically interrupts the gas supply, thereby shutting off the boiler.
The shutdown of the boiler is temporary and when the discharge state of exhaust fumes has returned to normal, the boiler automatically turns back on

Downloaded From www.Gas101.Co.UK

4.8 Draining the System

The heating system must be emptied as follows:
- Turn off the boiler;
- Attach a hose pipe and open the drain valve;
- Empty the system at the lowest points (where present). When the heating system is unused for an extended period of time, it is recommended that you add antifreeze with an ethylene glycol base to the water in the heating lines and radiators if the ambient temperature drops below 0°C during the winter.
  This makes repeated draining of the entire system unnecessary.

5. GAS ADJUSTMENTS

Table 5.1

CATEGORY II2H3+		Methane Gas G20	Liquid Butane Gas G30	Liquid Propane Gas G31
Lower Wobbe Index (15°C;1013mbar)	MJ/m³h	45.67	80.58	80.58
Nominal Delivery Pressure	mbar	20	29	37
Minimum Delivery Pressure	mbar	17	20	25
21 RFFI				
Main Burner: n. 12 jets (ø)	mm	1.30	0.77	0.77
Consumption (15°C; 1013mbar)	m³/h	2.4 - 1.05	----	----
Consumption (15°C; 1013mbar)	Kg/h	----	1.78 - 0.78	1.76 - 0.77
Gas Burner Pressure: max - min	mbar	8.5 - 1.7	27.5 - 6.2	37.4 - 8.0
28 RFFI				
Main Burner: n. 14 jets (ø)		1.30	0.77	0.77
Consumption (15°C; 1013mbar)	m³/h	3.15 -1.26	----	----
Consumption (15°C; 1013mbar)	Kg/h	----	1.78 - 0.78	1.76 - 0.77
Gas Burner Pressure: max - min	mbar	11.0 - 1.6	27.7 - 4.6	35.5 - 6.0

1 mbar = 10,197 mmc.a.]

The outlet pressure of the gas cock is obtained by completely loosening the screw on the solenoid. The maximum pressure of the gas to the burner will be equal to the nominal delivery pressure minus the head loss within the gas valve.

5.1 Changing the Type of Gas

The boiler can be converted to use either methane (natural) gas (G20) or LPG (G30 - G31) by an Authorised Service Centre.

The operations that must be performed are the following:
1. Replace the jets on the main burner (see table in section 5);
2. Adjust the maximum and minimum thermal capacity values for the boiler (see table in section 5);
3. Replace the gas rating plate;
4. Adjust the maximum thermal power setting;
5. Adjust the soft-light feature *(open the cover of the regulation screw on the gas valve (see **Fig. 5.1**). Rotate clockwise from min. to max. as per installation requirements).*

Downloaded From www.Gas101.Co.Uk

FIG. 5.1

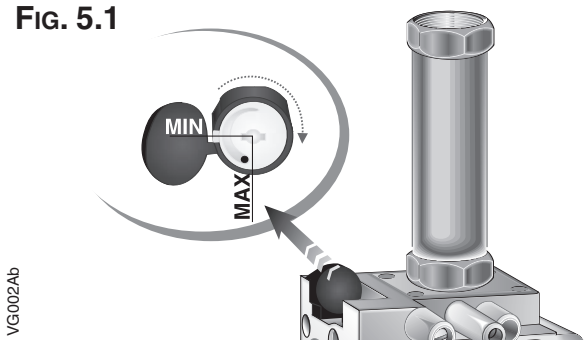

6. MAINTENANCE

It is recommended that the following inspections be carried out on the boiler at least once a year:

1 - Check the seals for the water connections; replace any faulty seals.
2 - Check the gas seals; replace any faulty gas seals.
3 - Visual check of the entire unit.
4 - Visual check of the combustion process or analysis of combustion by-products (see section 4.5) and cleaning of the burner if needed.
5 - If called for by point. 3, dismantling and cleaning of the combustion chamber.
6 - If called for by point. 4, dismantling and cleaning of the burner jets.
7 - Visual check of the primary heat exchanger:
  - check for overheating in the blade assembly;
  - clean the exhaust fan if needed.
8 - Adjustment of the flow rate of the gas: flow rate for lighting, partial load and full load.
9 - Check of the heating safety systems:
  - safety device for maximum temperature (overheat thermostat);
  - safety device for maximum pressure (safety valve).
10- Check of the gas safety systems:
  - safety device for lack of gas or flame ionisation (detection electrode);
  - safety device for gas cock.
11- Check of the electrical connection (make sure it complies with the instructions in the manual).
12- General check of the combustion by-products of the discharge/ventilation system.
13- Check of the general performance of the unit.

Downloaded From www.Gas101.Co.Uk

6. TECHNICAL INFORMATION

		micro SYSTEM 21 RFFI	micro SYSTEM 28 RFFI
CE Certification		63AU4549	63AU4549
Heat Input	max/min kW	22.7/10.0	29.8/12.0
Heat Output	max/min kW	21.0/8.7	27.8/10.5
Efficiency of Nominal Heat Input	%	92.8	93.5
Efficiency at 30% of Nominal Heat Input	%	90.8	90.7
Heat Loss to the Casing (ΔT=50°C)	%	1.2	0.2
Flue Heat Loss with Burner Operating	%	6.0	6.3
Flue Heat Loss with Burner Off	%	0.2	0.4
Maximum Discharge of Fumes (G20)	Kg/h	46.2	60
Residual Discharge Head	mbar	0.70	1.60
Consumption at Nominal Capacity(G20)	m^3/h	2.4	3.15
Gas Consumption after 10 Minutes*	m^3	0.32/0.39	0.37
(15°C, 1013 mbar) (G30-G31)	Kg/h	1.78/1.76	2.34/2.31
Temp. of exhaust fumes at nominal capacity	°C	117.2	128.8
CO_2 Content	%	6.81	6.9
O_2 Content	%	9	8.1
CO Content	ppm	20	48
Minimum Ambient Temperature	°C	+5	+5
Head Loss on Water Side (max) (ΔT=20°C)	mbar	200	200
Residual Head of System	bar	0.25	0.25
Heating Temperature	max/min °C	82/42	82/42
Expansion Vessel Capacity	l	6	6
Expansion Vessel Pre-load Pressure	bar	1	1
Maximum Water Content of System	l	130	130
Maximum Heating Pressure	bar	3	3
Nominal Pressure Natural Gas (G20)	mbar	20	20
LPG (G30-G31)	mbar	30-37	30-37
Electrical Supply (V±5%)	V/Hz	230/50	230/50
Power Consumption	W	155	155
Protection Grade of Electrical System	IP	X4D	X4D
Internal Fuse Rating		FAST 2 AT	FAST 2 AT
Weight	Kg	39	39
G.C. Number		**41-116-06**	**41-116-07**

*Calculated at 70% maximum output

Downloaded From www.Gas101.Co.Uk

Manufacturer: **Merloni TermoSanitari SpA - Italy**

Commercial subsidiaries:

MTS (GB) Limited
MTS Building
Hughenden Avenue
High Wycombe
Bucks HP13 5FT
Telephone: (01494) 755600
Fax: (01494) 459775
Internet: www.mtsgroup.com/uk
E-mail: info@uk.mtsgroup.com
Technical Advice: 0870 241 8180
Customer Service: 0870 600 9888

MTS Heating Limited
Damastown Industrial Park
Damastown Avenue
Mulhuddart
Dublin 15
Telephone: (01) 810 3723
Fax: (01) 810 3727
Internet: www.mtsgroup.com/ie
E-mail: info@ie.mtsgroup.com
Technical Advice: (01) 437 0121
Customer Service: (01) 437 0121

23 99 84 1549 000 - Stampa: bieffe RECANATI