THE IDEAL INSTALLATION & SERVICING MANUAL

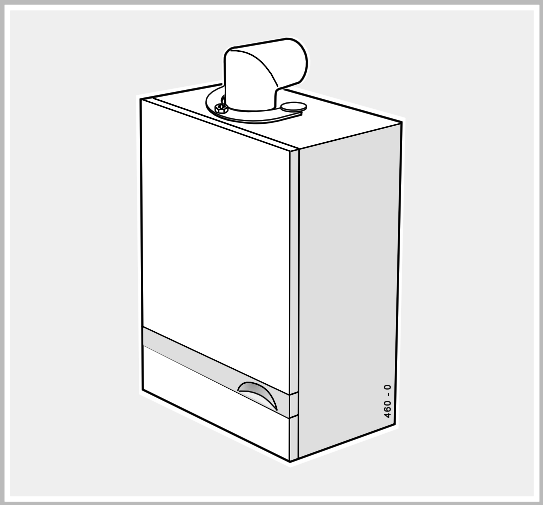

Note
In order to obtain the full benefit of this high performance boiler ensure that the gas supply pipework to the boiler is not less than 22mm O/D copper

response 80
the combi boiler

response 100
the combi boiler

response 120
the high flow combi

Wall mounted, gas fired, fanned flue combination boiler

Ideal BOILERS

Installers guide to domestic central heating boilers

Response: The combi boiler

The Ideal Response is a wall mounted, fanned flue combination boiler which serves a home's central heating system and delivers hot water on demand. It has been designed to be 'friendly' to the user, installer and service engineer.

Response: The fit anywhere combi

Simple fanned 'go anywhere' flue

The Response's flue turret simply rotates through 360° to allow horizontal outlet in any direction. Options include horizontal flue length extensions and the flue is self-sealing, eliminating the need for outside assembly - an important benefit in high-rise applications.

Downward or upward connections...

Water and gas connections have been designed to be as simple and fast as possible. The Ideal Response comes complete with a rugged mounting frame which can accommodate downward or upward routed gas, water and electrical connections before the boiler is fitted.

...and it fits inside a cupboard

Its compact size - up to half that of other combis - makes the Response ideal for any kitchen. It can be installed inside a standard size kitchen wall unit without insulation and with minimal ventilation.

Response: The combi you can rely on

The Response has been designed and developed with reliability as the number one priority. But even the finest engineered product may develop a fault at some stage in its lifetime. To support the Response we've created the Ideal Care Guarantee which sets out our target to repair any fault next day.

Free Guarantee: 1st Year Ideal Care

The home owner is entitled to 12 months free Ideal Care, which includes both parts and labour, to restore the boiler to full function. Please encourage the home owner to complete and return the registration form in their Householder's pack within 30 days of installation.

Optional Extra Year Cover with Ideal Care

You may wish to offer your own annual service plan or you may wish to advise the home owner to complete their application form for the appropriate level of extended Ideal Care - Silver, Gold or Platinum. Full details are available in the Ideal Care brochure.

CAUTION. To avoid the possibility of injury during the installation, servicing or cleaning of this appliance, care should be taken when handling edges of sheet steel components.

PERFORMANCE DATA

IMPORTANT. ***This manual is applicable only to Response boilers with a data plate prefix of RF or above***

Table 1 - General Data

Gas supply type & connection		2H-G20-20mbar, 22mm copper		
Inlet connection	Domestic Hot Water	15mm copper		
Outlet connection	Domestic Hot Water	15mm copper		
Flow & return connection	Central heating	22 mm - 28mm copper		
Flue terminal diameter	mm (in.)	100 (4)		
Max. working pressure (sealed systems)	bar (lb/in²)	2.65 (38.5)		
Electrical supply & loading		230 V ~ 50 Hz, 160W max		
External fuse rating		3A		
Internal fuse rating (BS 42 65)		PCB40 F1: 4ATASG PCB40 F2: 2AF HRC PCB41 F1: 2A HRC		
Boiler size	Height mm (in.)	640 (25 3/16)		
	Width mm (in.)	436 (17 1/8)		
	Depth mm (in.)	278 (10 15/16)		
		Response 80	**Response 100**	**Response 120**
Average flue temp / mass flow rate		235 °C / 11.8 g/s	235 °C / 14.7 g/s	235 °C / 14.7 g/s
Max. DHW water inlet pressure	bar (lb/in²)	10.0 (145.0)	10.0 (145.0)	10.0 (145.0)
Min. DHW water inlet pressure	bar (lb/in²)	1.0 (14)	1.2 (17)	1.2 (17)
Dry lift weight	kg (lb.)	50 (110)	51.2 (112)	51.2 (112)
Water content	Central heating litre (gal.)	1.7 (0.37)	1.7 (0.37)	1.7 (0.37)
	Domestic hot water litre (gal.)	0.48 (0.11)	0.7 (0.15)	0.7 (0.15)

Table 2 - Performance Data - CENTRAL HEATING

		Max	Min	Max	Min	Max	Min
Burner pressure (hot)	mbar (in.w.g.)	7.2(3.1)	3.5 (1.5)	6.7 (2.6)	1.8 (0.7)	6.7 (2.6)	1.8 (0.7)
Input based on nett CV	kW (Btu/h)	19.8(67500)	12.6(43000)	26.4(90000)	13.2(45000)	26.4(90000)	13.2(45000)
Input based on gross CV	kW (Btu/h)	22(75000)	13.9(47500)	29.3(100000)	14.7(50000)	29.3(100000)	14.7(50000)
Output	kW (Btu/h)	17.6(60000)	11.7(40000)	23.4(80000)	11.7(40000)	23.4(80000)	11.7(40000)
Gas consumption (hot)	l/s (ft³/h)	0.568(72)	0.359(45)	0.757(95)	0.380(48)	0.757(95.4)	0.380(48)

Table 3 - Performance Data - DOMESTIC HOT WATER

		Maximum		
		Response 80	**Response 100**	**Response 120**
Burner pressure (hot)	mbar (in.w.g.)	13.2 (5.2)	10.2 (4.0)	13.2 (5.2)
Input based on nett CV	kW (Btu/h)	26.4 (90 000)	33 (112 500)	39.7 (135 100)
Input based on gross CV	kW (Btu/h)	29.3 (100 000)	36.7 (125 000)	44.0 (150 000)
Output	kW (Btu/h)	23.4 (80 000)	29.3 (100 000)	35.2 (120 000)
Gas consumption (Hot)	l/s (ft³/h)	0.757 (95)	0.95 (120)	1.14 (143)
Flow 35 °C. temp. rise	l/m (gpm)	9.6 (2.1)	12.0 (2.6)	14.4 (3.2)
Domestic hot water specific rate	l/m (gpm)	11.2 (2.4)	14.6 (3.2)	17.1 (3.8)
Seasonal efficiency (SEDBUK) *		[79.4]%	[80.0]%	[80.0]%

* The value is used in the UK Government's Standard Assessment Procedure (SAP) for energy rating of dwellings. The test data from which it has been calculated have been certified by notified body.

Note. *Gas consumption is calculated using a calorific value of 38.7 MJ/m³ (1038 Btu/ft³) gross or 34.9 MJ/m³ (935 Btu/ft³) nett*

To obtain the gas consumption at a different calorific value:-

a. FOR L/S *- divide the gross heat input (kW) by the gross C.V. of the gas (MJ/m³)*

b. FOR FT³/H *- divide the gross heat input (Btu/h) by the gross C.V. of the gas (Btu/ft³)*

Key to symbols

IE = Ireland **GB** =United Kingdom (Countries of destination)

PMS = Maximum operating pressure of water

C13,C33 = A room sealed appliance designed for connection via ducts to a horizontal or vertical terminal which admits fresh air to the burner and discharges the products of combustion to the outside through orifices which, in this case, are concentric. The fan is up stream of the combustion chamber.

$\mathbf{I_{2H}}$ = An appliance designed for use on 2nd Family gas, Group H only.

Response 80 (Natural gas)	**G.C. Appliance No**. 47 348 02	**B.G. Certified - P.I. No**. ..... 87 AS 93
Response 100 (Natural gas)	**G.C. Appliance No**. 47 348 04	**B.G. Certified - P.I. No**. ..... 87 AT 20
Response 120 (Natural gas)	**G.C. Appliance No**. 47 348 01	**B.G. Certified - P.I. No**. ..... 87 AS 94

Destination Countries: GB and IE.

Data badge: top RH controls channel

CONTENTS

Air Supply 7
Boiler Dimensions/Clearances 6
Boiler Exploded Diagram 12
Commissioning and Testing 30
Electrical Connections 28
Electrical Diagrams 28
Electrical Supply Requirements 9
Extension Ducts - Fitting 25
Fault Finding 49
Flow Wiring Diagram 28
Flue Fitting
- **Rear outlet** 15
- **Side outlet** 20

Flue Installation Requirements 8
Gas Safety Regulations 7
Gas Supply Requirements 8
Initial Lighting 31
Installation 12
Mandatory Requirements 7
Sealed System Requirements 9
Servicing 33
Short List of Parts 60
Terminal Guards 8
Thermostatic Radiator valves 9
Unpacking 13
Water and Systems 8
Water Connections 6
Water Treatment 9
Wiring Diagrams 28

INTRODUCTION

Response combi boilers are wall mounted, low water content, fanned flue combination gas boilers of type C_{13} intended for use with gas group $I2_{H.}$

Central heating (CH) output modulates between 11.7 kW (40,000 Btu/h) minimum and 23.4 kW (80,000 Btu/h) maximum for Response 100/120 and 17.6kW (60 000Btu/h) maximum for Response 80.

Domestic hot water (DHW) output is also fully modulating, with a maximum of:

Response 80	23.4 kW	(80,000 Btu/h)
Response 100	29.3 kW	(100,000 Btu/h)
Response 120	35.2 kW	(120,000 Btu/h).

The boiler is suitable for connection to fully pumped, pressurised sealed water systems ONLY.

A system bypass is only required when TRV's are fitted to **all** radiators (see Frame 5).

Boilers are supplied fully assembled and, being a 'tube-within-tube' design, require no diverter valve or domestic hot water calorifier.

A circulating pump, pressure gauge, safety valve and expansion vessels for both central heating (CH) and domestic hot water (DHW) are provided.

The CH flow temperature is controlled by an electronic thermostat. In DHW mode the boiler modulates to sustain a nominal adjustable water flow temperature of 60 °C.

The boiler casing is of white painted mild steel with a drop-down controls access door.

The boiler temperature control is located behind the controls access door.

The heat exchanger is made of copper and cast iron.

The system pipework must include drain cocks in appropriate places. Pipework may be taken downwards or upwards behind the boiler (using the stand-off channels).

OPTIONAL EXTRA KITS

Programmer Kit - fits neatly within the casing. Separate fitting instructions are included with the kit.
Note. *If using an alternative programmer read Frame 42 first.*

Extension Ducts
Roof Flue kit
90° Elbow kit
45° Elbow kit
Powered Vertical Flue kit

Note. *When ordering Pack H or Pack K flue adaptor must be used.*

NOTE TO THE INSTALLER: LEAVE THESE INSTRUCTIONS ADJACENT TO THE GAS METER. ALSO COMPLETE THE BENCHMARK LOG BOOK AND GIVE THIS TO THE CUSTOMER.

benchmark™

OPERATION

With no call for CH the boiler fires only when DHW is drawn off. When there is a call for CH, the heating system is supplied at the selected temperature until DHW is drawn off. The full output of the boiler is then directed by the automatic switching off of the circulation pump to heat the inner coils and supply a maximum draw-off of :

Response 80	9.6 l/min	(2.1 gpm)	at 35^0 rise
Response 100	12.0 l/min	(2.6 gpm)	at 35^0 rise
Response 120	14.4 l/min	(3.1 gpm)	at 35^0 rise.

The nominal DHW temperature is 60 ^{o}C but water drawn off when the boiler has been on for central heating may be hotter than this, for a short period of time.

1 BOILER WATER CIRCUIT DIAGRAMS

Domestic Hot Water Circuit

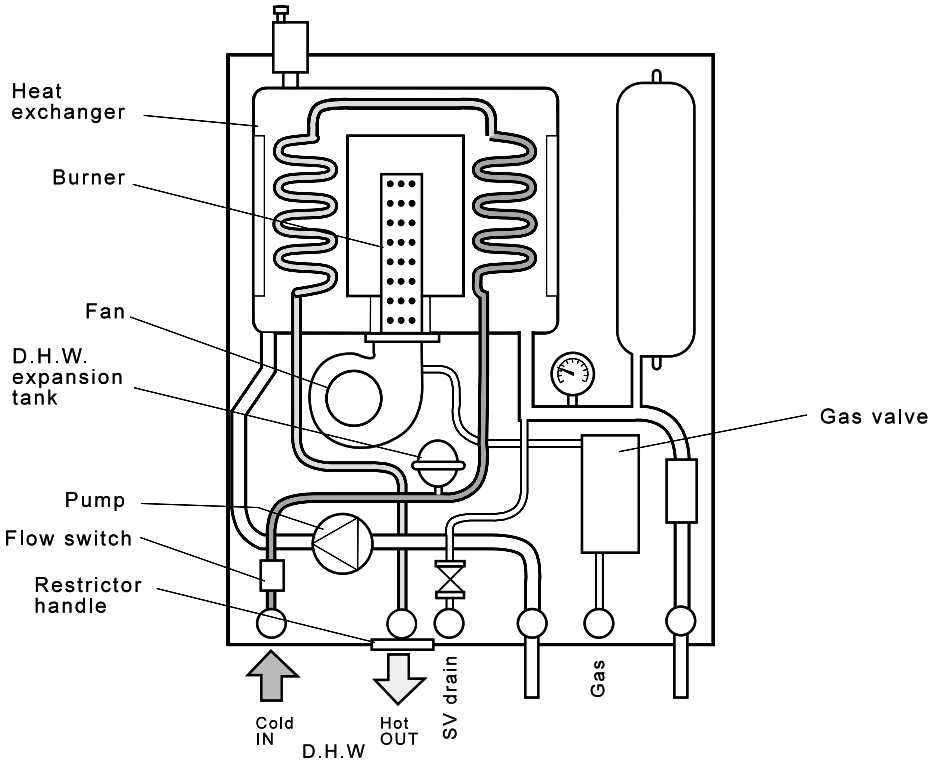

Central Heating Ciruit

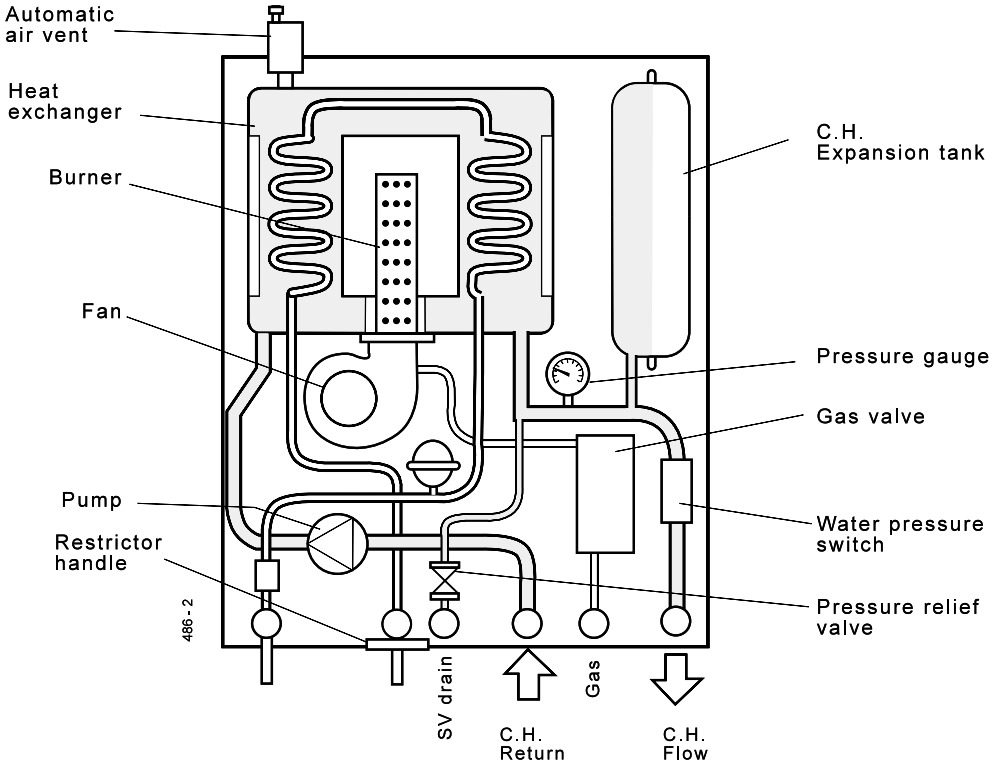

2 BOILER DIMENSIONS, SERVICES & CLEARANCES *all dimensions in mm (in.)*

Boiler connections are made on the mounting frame. Refer to Frame 17.

The following minimum clearances must be maintained for operation and servicing. Additional space will be required for installation, depending upon site conditions.

Side and Rear Flue

a. Provided that the flue hole is cut accurately, e.g. with a core drill, the flue can be installed from inside the building where wall thicknesses do not exceed 600mm (24"). Where the space into which the boiler is going to be installed is less than the length of flue required the flue must be fitted from the outside.

Installation from inside ONLY

b. If a core boring tool is to be used inside the building the space in which the boiler is to be installed must be at least wide enough to accommodate the tool.

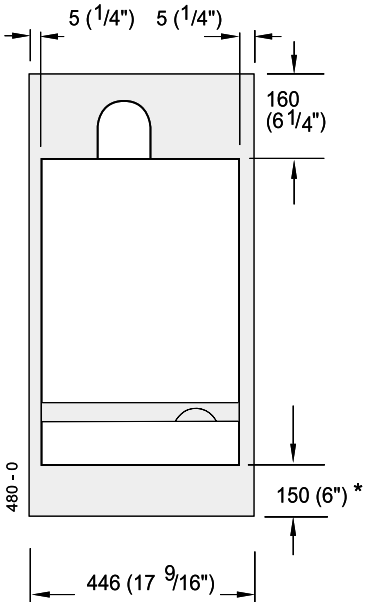

Front clearance

The minimum front clearance when built in to a cupboard is 5mm (1/4") from the cupboard door but 450mm (17 3/4") overall clearance is still required, with the cupboard door open, to allow for servicing. See Table 4.

CLEARANCES		
Per side	5 mm	
Top	160 mm	(depth of elbow and lift
Front	450 mm	clear of spigot space,
Bottom	150 mm	internal wall ring plate)

*** Bottom clearance**

Bottom clearance after installation can be reduced to 10mm in an adequately ventilated enclosed cupboard. However, 150 mm must be available for servicing.

Top Water Connections

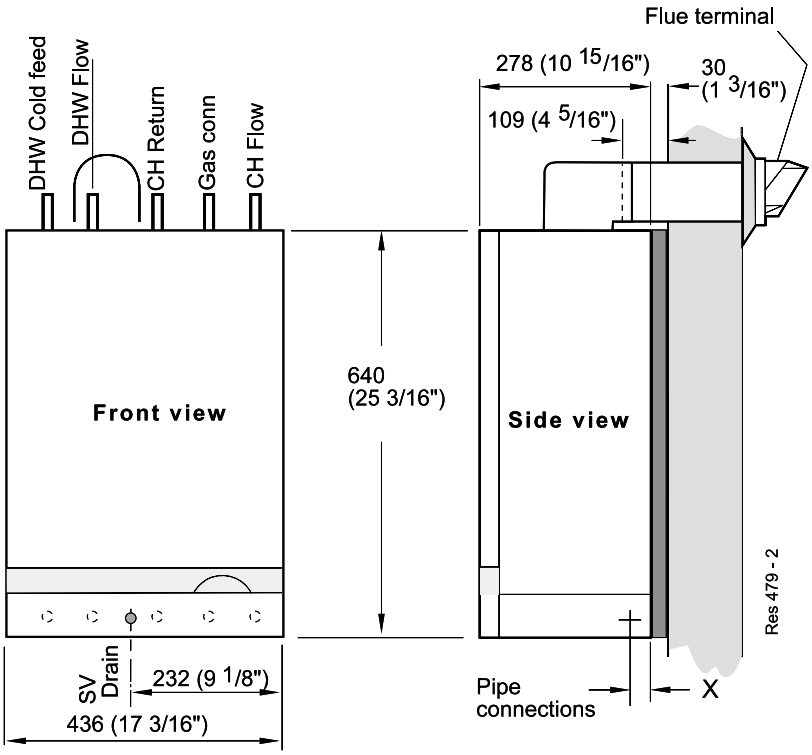

Bottom Water Connections

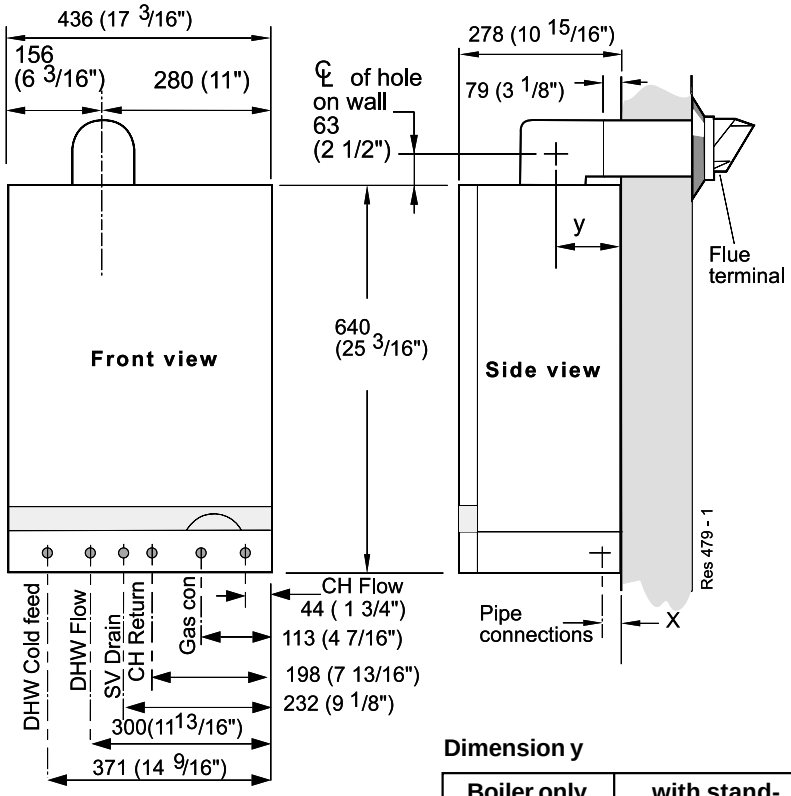

Dimension y

Boiler only	with stand-off brackets
139mm (5 (7/16")	169mm (6 5/8")

Distance X is 20mm for DHW pipes and safety valve outlet.

Distance X is 23.5mm for CH pipes and gas inlet.

SAFETY

Current Gas Safety (Installation and Use) Regulations or rules in force.

It is law that **all** gas appliances are installed and serviced by a CORGI registered installer in accordance with the above regulations. Failure to install appliances correctly could lead to prosecution. It is in your own interest, and that of safety, to ensure the law is complied with.

The installation of the boiler MUST also be in accordance with the latest I.E.E (BS.7671) Wiring Regulations, local building regulations, bye-laws of the local water authority, the building regulations and the Building Standards (Scotland) and any relevant requirements of the local authority.

Detailed recommendations are contained in the following British Standard Codes of Practice:

BS. 5440:1 Flues (for gas appliances of rated input not exceeding 60 kW).

BS. 5440:2 Ventilation (for gas appliances of rated input not exceeding 60 kW).

BS. 5449 Forced circulation hot water systems.

BS. 5546 Installation of gas hot water supplies for domestic purposes (2nd Family Gases)

BS. 6700 Design, installation testing and maintenance of services supplying hot water for domestic use.

BS. 6798 Installation of gas fired hot water boilers of rated input not exceeding 60 kW.

BS. 6891 Low pressure installation pipes.

Health & Safety Document No. 635.

The Electricity at Work Regulations, 1989.

The manufacturer's notes must NOT be taken, in any way, as overriding statutory obligations.

IMPORTANT. These appliances are CE certificated for safety and performance. It is, therefore, important that no external control devices, e.g. flue dampers, economisers etc., are directly connected to these appliances unless covered by these Installation and Servicing Instructions or as otherwise recommended by **Caradon Plumbing Limited** in writing. If in doubt please enquire.

Any direct connection of a control device not approved by **Caradon Plumbing Limited** could invalidate the certification and the normal appliance warranty. It could also infringe the Gas Safety Regulations and the above regulations.

SAFE HANDLING OF SUBSTANCES

Care should be taken when handling the boiler insulation panels, which can cause irritation to the skin. No asbestos, mercury or CFCs are included in any part of the boiler.

LOCATION OF BOILER AND FLUE OUTLET

The boiler must be installed on a flat and vertical wall, capable of adequately supporting the weight of the boiler and any ancillary equipment.

The boiler may be fitted on a combustible wall and insulation between the wall and the boiler is not necessary, unless required by the local authority.

The boiler must not be fitted outside.

Timber Framed Buildings

If the boiler is to be fitted in a timber framed building it should be fitted in accordance with the Institute of Gas Engineering document IGE/UP/7:1998.

Bathroom Installations

This range of appliances is rated **IP 1XB**.

The boiler may be installed in any room or internal space, although particular attention is drawn to the requirements of the current I.E.E. (BS.7671) Wiring Regulations and, in Scotland, the electrical provisions of the building regulations applicable in Scotland with respect to the installation of the boiler in a room or internal space containing a bath or shower.

If the appliance is to be installed in a room containing a bath or shower then, providing water jets are not going to be used for cleaning purposes (as in communal baths/showers), the appliance can be installed in Zone 3, as detailed in BS.7671.

Where installation will be in an unusual location, special procedures may be necessary and BS 6798 gives detailed guidance on this aspect.

Compartment Installations

A compartment or cupboard, including airing cupboards, must conform to the following:

- BS. 6798.
- For the minimum clearances required for safety and subsequent service see the wall mounting template and Frame 2. In addition, sufficient space will be required to allow lifting access to the wall mounting plate.
- Ventilation of the compartment ,e.g. permanent high and low level air vents, must be provided in accord with the current issue of BS 5440, Part 2. See Table 4 and 'Air Supply' .

Table 4 - Minimum air vent free area for compartments / cupboards (high and low levels)

Response	Vent Level	Air from room or internal space - cm² (in.²)	Air direct from outside - cm² (in.²)
80	High/Low	265 (41)	135 (21)
100	High/Low	317 (49)	158 (24)
120	High/Low	396 (62)	203 (32)

AIR SUPPLY

Detailed recommendations for air supply are given in BS.5440:2. The following notes are for general guidance:

1. If the boiler is to be installed in a cupboard or compartment, permanent air vents are required (for cooling purposes) in the cupboard/compartment at both high and low levels. The air vents must either communicate with room/internal space or be direct to outside air. The minimum effective areas of the permanent air vents required in the cupboard/compartment are specified in Table 4 and are related to maximum rated heat input.
2. Both air vents MUST communicate with the same room or internal space or MUST be on the same wall to outside air.
3. In siting the air vents, care must be taken to avoid the freezing of pipework.
4. If the boiler is NOT installed in a cupboard or compartment no air vent is necessary.

GAS SUPPLY

The local gas supplier should be consulted, at the installation planning stage, in order to establish the availability of an adequate supply of gas. An existing service pipe must NOT be used without prior consultation with the local gas supplier.

A gas meter can only be connected by the local gas supplier or by a registered CORGI installer.

Check that the appliance is suitable for the proposed gas supply. A working gas pressure of 20 mbar MUST be available at the boiler inlet.

IMPORTANT.
Installation pipes MUST be fitted in accordance with BS. 6891. Pipework from the meter to Response boilers MUST be of an adequate size, i.e. not less than 22mm O.D. copper or 3/4" BSP iron.

The complete installation MUST be tested for gas soundness and purged as described in the above code.

Table 5 - Gas Supply

	Total length of supply pipe (metres)									Pipe size
	9	12	15	20	25	35	40	45	50	(mm Dia.)
Gas Discharge	160	140	120	100	89	74.2	67.1	63.6	60	22
ft^3/h	330	280	250	210	180	151.9	137.7	130.7	123.6	28

Note. *Each fitting used in the gas line from the meter is equivalent to a length of straight pipe which must be added to the straight pipe length to give the total length. i.e.: bend = 0.5 metres, Tee = 0.5 metres, 90° elbow = 0.3 metres.*

Table 6 - Balanced flue terminal position
Approved Manufacturer's Clearance

N.B. *These clearances are for horizontal flue only. For vertical clearances see the publication for Pack K/Pack H.*
Note (Positions 2-6) *: Due to the terminal design, installation is possible with clearances less than those specified in BS 5440, Part 1.*

Terminal Position	Minimum Spacing
1. Directly below or alongside an opening window, air vent or other ventilation opening	300 mm (12")
2. Below guttering, drain pipes or soil pipes	25 mm (1")
3. Below eaves	25 mm (1")
4. Below balconies or a car port roof	25 mm (1")
5. From vertical drain pipes or soil pipes	25 mm (1")
6. From internal or external corners	25 mm (1")
7. Above adjacent ground, roof or balcony level	300 mm (12")
8. From a surface facing the terminal	600 mm (24")
9. From a terminal facing a terminal	1200 mm (48")
10. From an opening in a car port (e.g. door or window) into dwelling	1200 mm (48")
11. Vertically from a terminal on the same wall	1500 mm (60")
12. Horizontally from a terminal on the wall	300 mm (12")

FLUE INSTALLATION

The flue must be installed in accordance with the recommendations of BS. 5440: Part 1.

The following notes are intended for general guidance:

1. The boiler MUST be installed so that the terminal is exposed to external air.
2. It is important that the position of the terminal allows the free passage of air across it at all times.
3. Minimum acceptable spacing from the terminal to obstructions and ventilation openings are specified in Table 6.
4. Where the lowest part of the terminal is fitted less than 2m (6'6") above a balcony, above ground or above a flat roof to which people have access then the terminal MUST be protected by a purpose designed guard. The minimum spacing in Table 6, Nos. 2, 3, 4, 5 and 6 would be 75mm, in order to allow a terminal guard to be fitted.

   Terminals guards are available from boiler suppliers - ask for TFC Guard, Model K1. In case of difficulty contact:

   Grasslin (UK) Ltd., Tower House, Vale Rise, Tonbridge, Kent TN9 1TB. Tel: 01732 359888. Fax: 01732 354445. www.ffc.ukco.com

   Ensure that the guard is fitted centrally.
5. The flue assembly shall be so placed or shielded as to prevent ignition or damage to any part of any building.
6. The air inlet/products outlet duct and the terminal of the boiler MUST NOT be closer than 25mm (1") to combustible material. Detailed recommendations on the protection of combustible material are given in BS. 5440: 1990.
7. Where it is essential that the terminal wall plate is fitted, i.e. wall thicknesses over 610mm (24") or with an inaccurately cut hole, the minimum spacing in Table 6, Nos. 2, 3, 4, 5 and 6 would be 60mm (2.4") in order to allow the terminal wall plate to be fitted.

IMPORTANT. It is the responsibility of the installer to ensure, in practice, that products of combustion discharging from the terminal cannot re-enter the building or any other adjacent building through ventilators, windows, doors, other sources of natural air infiltration, or forced ventilation / air conditioning.

If this should occur the appliance MUST be turned OFF, labelled as 'unsafe' until corrective action can be taken.

FLUE LENGTHS

The flue assembly can be adapted to accommodate flue lengths up to 3 metres for the 80 and up to 4m for the 100 and 120. Refer to Frame 10.

WATER CIRCULATION SYSTEM

The boilers are designed for connection to pressurised, fully pumped, sealed water central heating systems ONLY. The domestic hot water (DHW) calorifier is incorporated within the heat exchanger and only requires connection to the mains water supply.

IMPORTANT.

Copper tubing to BS2871:1 MUST be used throughout the heating and domestic hot water systems.

Ensure that the mains water supply pressure is adequate to provide the required DHW flow rate.
Refer to Table 1 on page 3.

The central heating system should be installed and commissioned in accordance with BS. 6798 and, in addition, for smallbore and microbore systems BS. 5449.

The domestic hot water system should be in accordance with BS. 5546 and BS. 6700.

Any soldered joints on potable water pipework MUST NOT be made with solder containing lead.

Ancillary pipework not forming part of the useful heating surface should be lagged to prevent heat loss and any possible freezing - particularly where pipes run through roof spaces or ventilated underfloor spaces.

Draining taps should be at least 1/2" BSP nominal size and be in accordance with BS 2879.

Maximum recommended system hydraulic losses are given in the Table within Frame 5.

WATER TREATMENT

Antifreeze fluid, corrosion and scale inhibitor fluids suitable for use with boilers having copper heat exchangers may be used in the central heating system.

For further information contact either:

Fernox Manuf. Co. Ltd	or	G E Betz Ltd.,
Tandem House		Widnes
Marlowe Way		Cheshire
Croydon, Surry CRO 4XS		
Tel. 0870 601 5000		Tel: 0151 424 5351

THERMOSTATIC RADIATOR VALVES (TRV)

Caradon Plumbing Limited recommend that heating systems utilising full thermostatic radiator valve control of temperature in individual rooms should also be fitted with a room thermostat controlling the temperature in a space served by radiators not fitted with such a valve as stated in BS. 5449.

When thermostatic radiator valves are used, the space heating temperature control over a living area having a heating requirement of at least 10% of the boiler heat output should be achieved using a room thermostat whilst other rooms are individually controlled by thermostatic radiator valves.

For further information refer to the 'Good Practice Guide 143', a publication of the Energy Efficiency Office, available from the Building Research Establishment, Garston, Watford WD2 7JR. Tel: 01923 664258.

ELECTRICAL SUPPLY

WARNING. This appliance must be efficiently earthed.

Wiring external to the appliance MUST be in accordance with the current I.E.E. (BS.7671) Wiring Regulations and any local regulations which apply.

The point of connection to the mains should be readily accessible and adjacent to the boiler, except for bathroom installations where the point of connection to the mains MUST be situated outside of the bathroom.

Note. *Where a room sealed appliance is installed in a room containing a bath or shower then the appliance and any electrical switch or appliance control utilising mains electricity should be so situated that it cannot be touched by a person using the bath or shower.*

3 SEALED SYSTEM REQUIREMENTS - Central Heating

Note. *Response combination boilers are suitable for fully pumped pressurised sealed systems only.*

REQUIREMENTS

1. General

Any method of filling, refilling, topping up or flushing sealed primary hot water circuits from the mains via a temporary hose connection is only allowed if it complies with Water Bye-law 14, which states:

" (1) No closed circuit shall be connected to a supply pipe.

(2) Paragraph (1) shall not apply to a temporary connection provided that:

a. The connection is made through a double check valve assembly or some other no less effective device which is permanently connected to that circuit;

and

b. The temporary connection is removed after use. "

The method described in this instruction complies with that Bye-law.

2. BS. Requirements

The installation must comply with the requirements of BS. 6891:1988 and BS. 5449.

3. Flow Temperature

The installation should be designed to work with flow temperatures of up to 90° C.

4. Working Pressure

All components of the system must be suitable for a working pressure of 3 bar (45 lb/in^2) and temperature of 110°C. Extra care should be taken in making all connections so that the risk of leakage is minimised.

The following components are incorporated within the appliance:

a. Circulating pump.

b. Safety valve; with a non-adjustable pre-set lift pressure of 3 bar (45lb/in^2).

c. Pressure gauge; covering a range of 0-6 bar.

d. 8-litre expansion vessel; with an initial charge pressure of 1 bar (15 lb/in^2).

e. Domestic hot water (DHW) mini expansion vessel.

For further details refer to BS.5449:1 and the British Gas Corporation publication 'Specifications for Domestic Central Heating and Hot Water'.

4 SEALED SYSTEM REQUIREMENTS - Central Heating - continued

5. Filling the system

Fill the system through a temporary hose connection from a draw-off tap supplied from a service pipe under mains pressure. Where the mains pressure is excessive a pressure reducing valve shall be used to facilitate filling.

The following fittings shall form a permanent part of the filling system:

A double non-return valve with at least 1 isolation valve, which is used as a temporary connection to fill the system from the mains, after which it should be disconnected and left with the installation.

Proceed with the following:

- Thoroughly flush out the whole of the system with cold water before fitting the boiler.
- Fill and vent the system until the pressure gauge registers 1.5 bar (22 lb/in^2). Examine for leaks.
- Release water from the system until a pressure of 1 bar (15 lb/in^2) is reached. To avoid getting debris on the valve seat, do **not use** the safety valve to do this.
- Light the boiler and heat the system to the maximum working temperature. Examine for leaks.
- Turn off the boiler and drain the system while still hot.
- Refill and vent the system.
- Re-pressurise the system to the desired charge pressure (see table below).

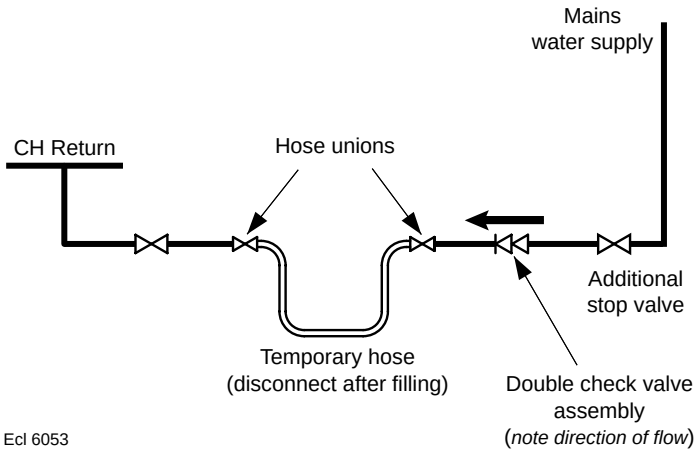

6. Size of expansion vessel

For the system water expansion to be contained by the 8-litre expansion vessel fitted to the boiler the cold system volume must not exceed:

119 litres when pressurised to 0.5 bar (cold)

107 litres when pressurised to 0.7 bar (cold)

91 litres when pressurised to 1.0 bar (cold)

If the pressure exceeds 2.65 bar when the boiler is up to temperature with all radiators in use then an additional expansion vessel MUST be installed on the return pipework.

For expansion volumes see table below.

Guidance on vessel sizing is given below and also in BS 7074:1 and BS 5449.

Vessel sizing / Expansion volumes

System charge pressure (bar)	0.5	0.7	1.0
Safety valve setting (bar)	3.0		
Vessel pre-charge pressure (bar)	0.5	0.7	1.0
System volume litres	**Volume of expansion vessel in addition to 8-litre unit fitted to boiler**		
75	None	None	None
100	None	None	0.8
125	0.4	1.3	3.0
150	2.1	3.1	5.1
175	3.8	4.1	7.3
200	5.4	6.8	9.5
225	7.1	8.7	11.7
250	8.8	10.5	13.9
275	10.6	12.4	16.1
300	12.2	14.2	18.4
Multiply this factor by system volume and deduct 8 litres to obtain size of additional vessel for other system volumes.	0.067	0.074	0.088

5 SEALED SYSTEM REQUIREMENTS - Central Heating - continued

7. Thermostatic radiator valves.

Caradon Plumbing Limited support the recommendations made by leading manufacturers of domestic heating controls that heating systems utilising full thermostatic radiator valve control of temperature in individual rooms should also be fitted with a room thermostat controlling the temperature in a space served by radiators not fitted with such a valve. Such an arrangement will provide for a more efficient control of the environment and will also avoid the continuous running of the circulation pump during programmed heating ON periods, saving electrical energy.

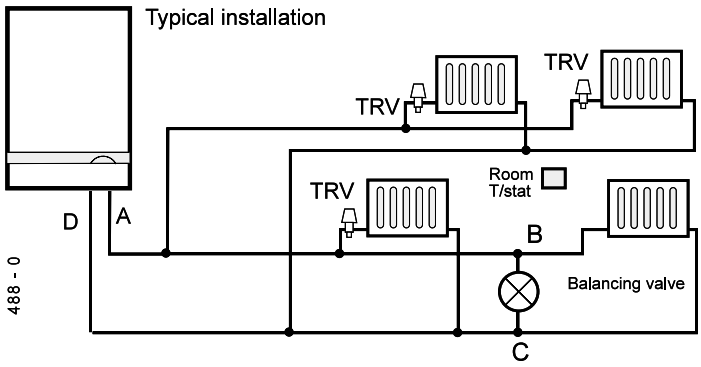

IMPORTANT.

It is therefore strongly recommended that, when thermostatic radiator valves are used, the space heating temperature control over a living/dining area or a hallway, having a heat requirement of at least 10% of the boiler output, is achieved using a room thermostat whilst other rooms are individually controlled by thermostatic radiator valves.

However, if thermostatic radiator valves are fitted to **all** radiators then a bypass MUST be fitted. This should consist of 22mm (3/4") pipe positioned as far from the boiler as possible and incorporating a balancing valve *which cannot be adjusted by the householder.*

For adjustment refer to Frame 45.

a. The total length of pipework **A, B, C & D** *MUST NOT* be less than 3m (10') and must not include any other valves.

b. The balancing valve MUST be at least one turn open.

8. Hydraulic resistance

Having subtracted the hydraulic resistance of the boiler the head available to overcome system resistance at MAXIMUM CENTRAL HEATING OUTPUT, with an 11°C (20°F) temperature differential, is shown in the table.

Water Flow Rate and Pressure Loss

		Response 80	Response 100/120
Max CH Output	kW (Btu/h)	17.6 (60 000)	23.4 (80 000)
Water flow rate	l/sec (gal/min)	0.382 (5.04)	0.508 (6.7)
Temperature differential	°C (°F)	11 (20)	11 (20)
Head available for system pump, pos.3	m.w.g. (ft.w.g.)	2.75 (9.0)	2.5 (8.0)

9. Draining the system

Draining taps MUST be located in accessible positions to permit the draining of the whole central heating system, including the central heating side of the boiler. The taps should be at least 1/2" BSP nominal size and be in accordance with BS 2879. The boiler flow and return service valves (fitted to the piping frame) have drain plugs to drain the BOILER ONLY, in the event of the system drain tap being unable to do so.

6 DOMESTIC HOT WATER REQUIREMENTS

1. The domestic hot water service must be in accordance with BS 5546 and BS 6700.

2. For the minimum and maximum working pressures of the Response domestic hot water circuit refer to Table 1, page 3.
However in areas where DHW inlet pressures are greater than 2 bar a water pressure governor should be fitted to ease commissioning

3. The cold water supply pipe should be flushed before fitting the boiler.
It is the responsibility of the installer to ensure that the DHW inlet is free from debris.

4. The boilers are suitable for connection to most types of washing machine and dishwashing appliances.

5. When connecting to suitable showers, i.e. those designed for modulating domestic hot water, ensure that:

a. The cold inlet to the boiler is fitted with an approved anti-vacuum or syphon non-return valve.

b. Hot and cold supplies are of equal pressure.

6. Hard water areas

In areas where the water is 'hard' it is recommended that a proprietary scale-reducing device is fitted into the boiler cold supply, within the requirements of the local water company.

7. DHW Filter

A filter is provided for fitting to the DHW inlet connection.

This filter MUST be fitted in ALL installations.

Refer to the adjoining table for the minimum DYNAMIC inlet water pressure required to achieve maximum boiler output.

Boiler	Water Pressure
Response 80	1.0 bar
Response 100	1.2 bar
Response 120	1.2 bar

7 BOILER ASSEMBLY - Exploded View

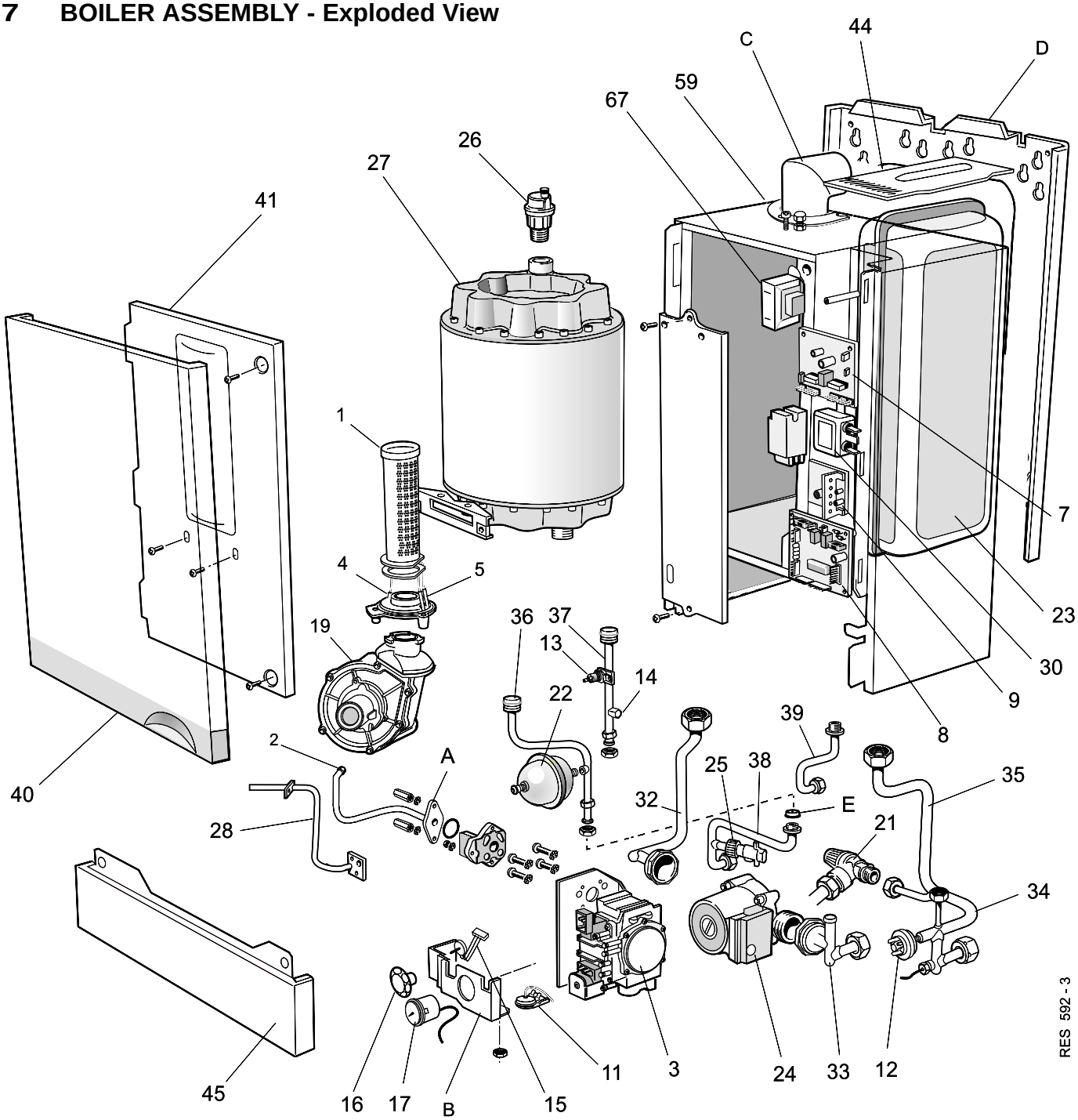

LEGEND

A. Gas injection pipe.
B. Pressure gauge sub assy.
C. Flue outlet elbow
D. Wall mounting plate
1. Main burner
2. Main burner injector
3. Gas valve
4. Flame sensing electrode
5. Ignition electrode
7. PCB 41
8. PCB 40
9. PCB 8: Fan speed controller.
11. Boiler overheat t'stat.
12. Water pressure switch.
13. DHW O/heat t'stat.
14. DHW sensor.
15. Potentiometer harness.
16. Potentiometer knob
17. Pressure gauge.
19. Fan assembly.
21. Pressure relief valve.
22. DHW expansion vessel
23. CH expansion vessel
24. Pump.
25. DHW Flow switch.
26. Automatic air vent.
27. Heat exchanger.
28. Pressure sensing pip
30. EMC filter.
32. CH Return pipe assy.
33. Pump pipe assy.
34. CH Lower flow pipe assy.
35. CH Upper flow pipe assy.
36. DHW Upper cold pipe assy.
37. DHW Upper hot pipe assy.
38. DHW Lower cold pipe assy.
39. DHW Lower hot pipe assy.
40. Boiler front panel.
41. Sealing panel
44. Tank cover assy
45. Controls door assy.
59. Turret clamp.
67. Transformer.

8 UNPACKING

The boiler is supplied fully assembled in one Pack A, together with a standard flue assembly for lengths up to 600mm, rear or side flue outlet, in Pack B.

Unpack and check the contents.

Pack A Contents

- The boiler.
- These Installation & Servicing Instructions.
- The User's Instructions.
- Wall mounting template.
- Wall mounting frame.
- 1 pair stand-off channels (optional use).
- Flue turret.
- Clamping and sealing ring.
- Mains connector assy.
- Hardware Pack.
- Coupling Hardware Pack.

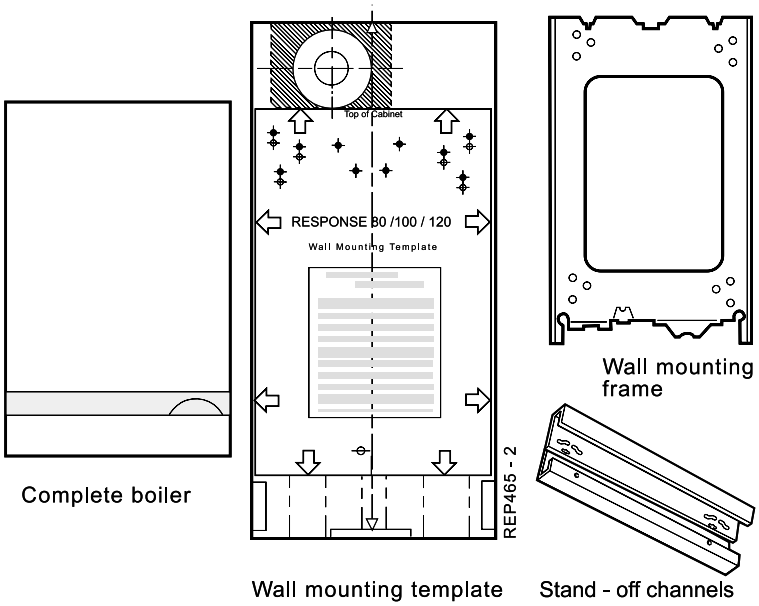

Hardware Pack

- M6 x 16 Pp. Hd. screw - 4 off.
- 1/2" x 15mm copper connector - 1 off.
- No.14 x 2" slotted Rd. Hd. screw - 6 off.
- Wall plug (brown) - 6 off.
- 1/2" Nut - 2 off.
- M28 Nut - 2 off.
- 22mm pipe connector - 2 off.
- 15mm pipe connector - 2 off.
- 22mm x 15mm reducing coupling - 1 off.
- Pressure relief valve drain pipe - 1 off.
- Pressure relief valve nut - 1off.
- Gas pipe assy. - 1 off.
- 22mm olive - 2 off.
- 15mm olive - 3 off.
- 26mm Sealing washer - 3 off.
- 12mm Sealing washer - 3 off.

Coupling Hardware Pack.

- 28 x 22 mm straight coupling.

Filter Hardware Pack.

- DHW inlet filter

Pack B Contents

- Terminal grille assembly
- No.8 x 8mm self tapping screw - 3 off
- No.10 x 2" slotted Rd. Hd. screw - 4 off
- Flue support cutting aid - 1 off
- Wall plugs - 4 off
- Terminal wall plate - 1 off

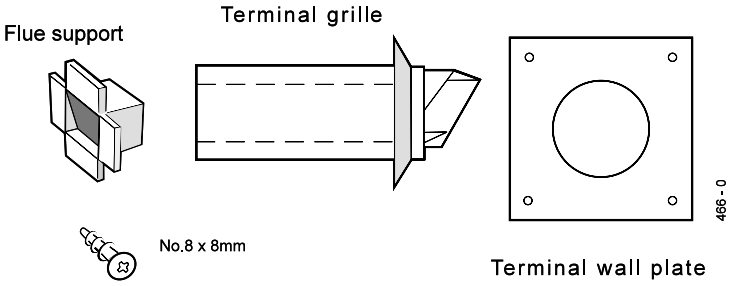

9 PACKAGING AND FRONT PANEL REMOVAL

1. Remove the lid.
2. The top tray contains:
   - Flue turret
   - Mounting frame
   - Hardware pack
   - Stand-off channels
   - Wall mounting template
   - Installation instructions

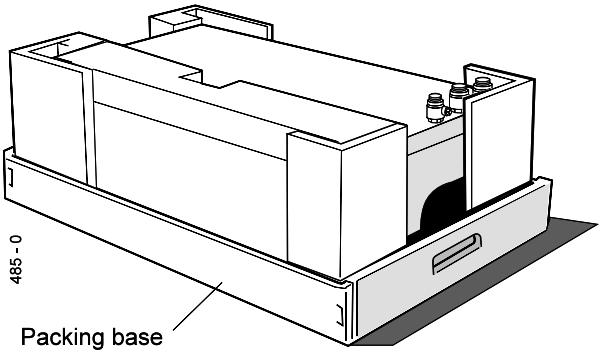

These contents can be removed, leaving the boiler in its protective package.

10 DETERMINING THE FLUE LENGTH AND FLUE PACKS REQUIRED

USE A MAXIMUM OF 3 EXTENSION DUCTS ONLY FOR THE 80 AND A MAXIMUM OF 4 EXTENSION DUCTS FOR THE 100 AND 120.

When using 90° elbow kits, each elbow is equivalent to 1 metre flue length.

Calculate the total length of flue by the following:

Rear flue length = Dim. W + 79mm (3 1/8")
Rear flue length with stand-off channels = Dim. W + 109mm (4 3/8")

RHS flue length = Dim. R + 220mm (8 5/8")

LHS flue length = Dim. L + 96mm (3 3/4")

Note.
These figures include the length of flue entering the flue turret socket.

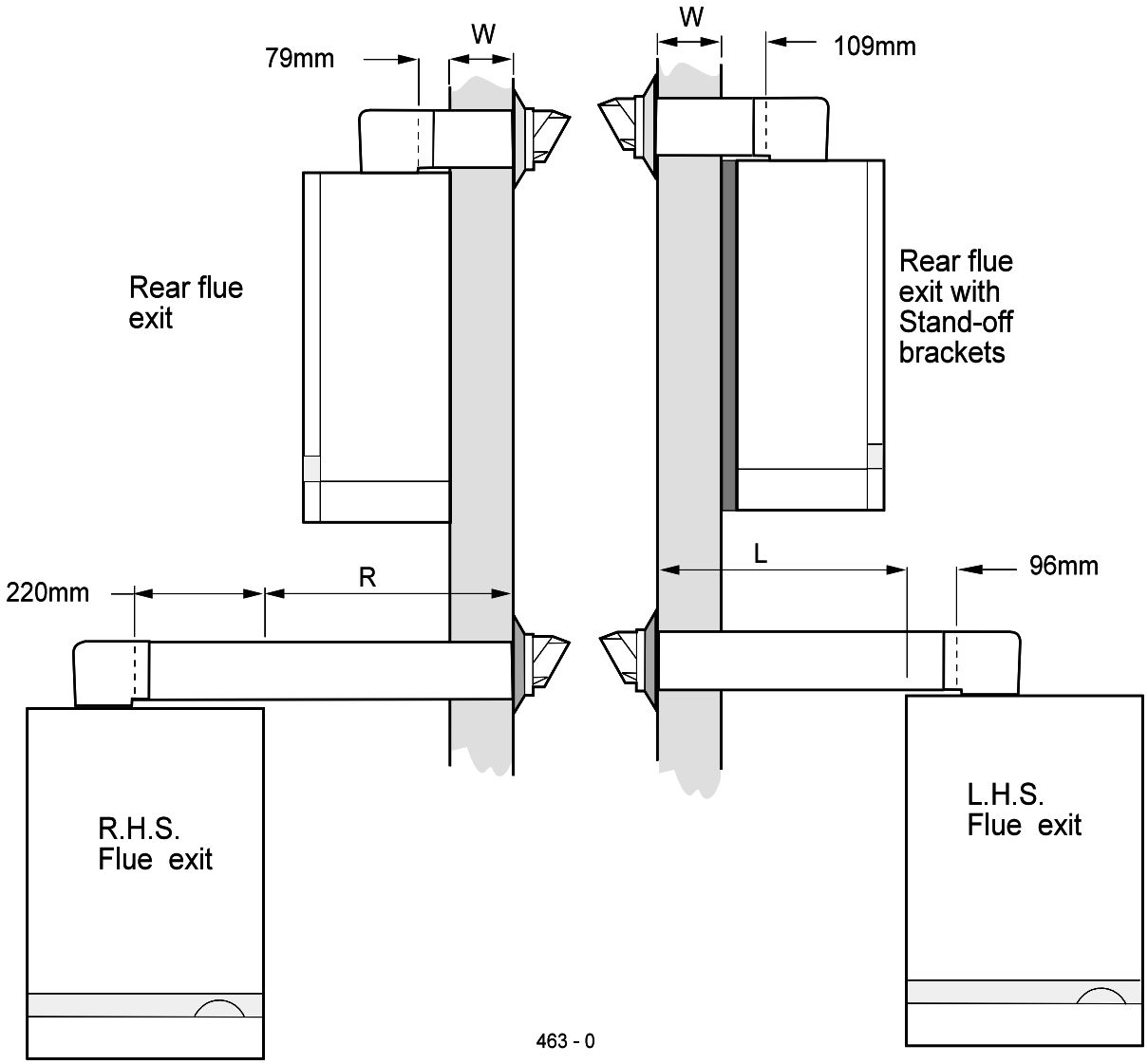

Flue Kit Requirements

Total Length of Flue	Extra Packs Required
* 600mm (23 5/8")	None
*1600mm (63")	One Pack D
2600mm (102 3/8")	Two Pack D
3000mm (118 1/8")	Three Pack D
4000mm (157 1/2")	Four Pack D**

Pack B - supplied as standard.

Pack D - optional extra kit, to extend the flue.

***N.B.**

*If the measured flue length is **only just above** these sizes, it may be necessary to shorten the standard flue before adding extension duct(s), in order to prevent interference between flue duct connections and the boiler flue elbow.*

** *4000mm maximum for the 100 and 120 only.*

For side flue option PROCEED TO FRAME 20.

11 REAR FLUE ASSEMBLY - Exploded View

LEGEND

1. Terminal.
2. Weather seal.
3. Duct assembly.
4. Sealing ring.
5. Clamping ring.
6. No.8 x 8 self tapping screw.
7. Flue turret.
8. M5 x 10 pozi Hex screw.
9. Turret clamp.

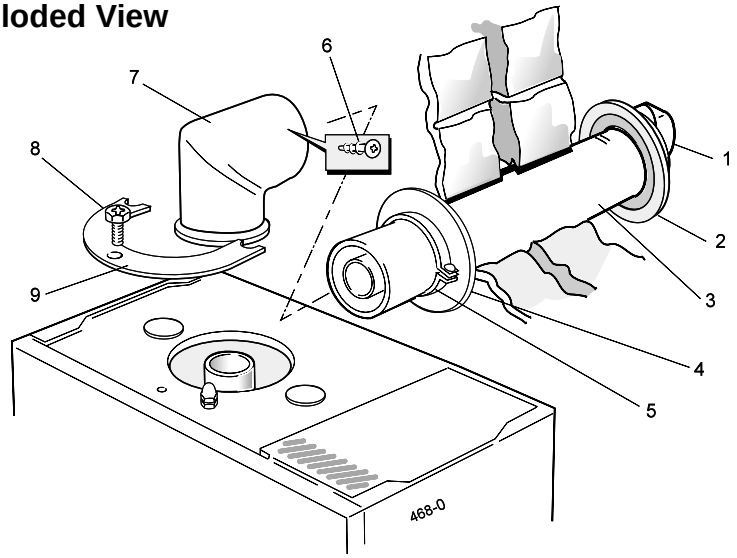

12 WALL MOUNTING TEMPLATE (Rear Flue)

IMPORTANT.

For direct mounting (wall mounting frame on wall) choose one black dot in each group.

If using the stand-off channels choose one dotted circle in each group. Care MUST be taken to ensure the correct holes are drilled.

1. Tape the template into the selected position.
2. Ensure squareness by hanging a plumbline as shown.
3. Mark onto the wall the following:
   - **a.** The 6 wall mounting plate screw positions.
   - **b.** The position of the flue duct.

   Mark the centre of the hole as well as the circumference.
4. Remove the template from the wall.

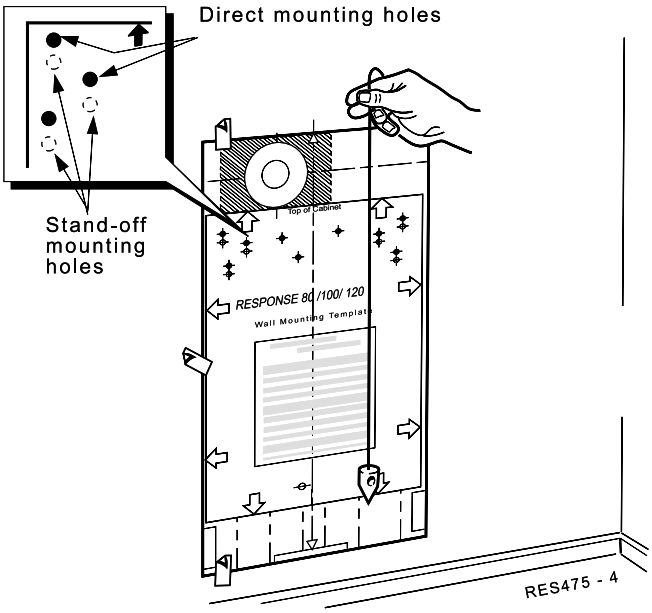

13 DRILLING THE WALL (Rear Flue)

IMPORTANT. Ensure that, during the cutting operation, masonry falling outside the building does not cause damage or personal injury.

1. Cut the flue hole (preferably with a 5" core boring tool), ensuring that the hole is square to the wall.
2. Measure and note the wall thickness 'W'.
3. Drill the 6 fixing holes with an 8mm (5/16") masonry drill.

   Note. *If the terminal is to be sited within 25-40mm of a corner or vertical pipe (refer to Table 5) then the hole MUST be accurately cut and the rubber weather seal trimmed around the groove provided.*

(The terminal wall plate cannot be fitted close to a corner).

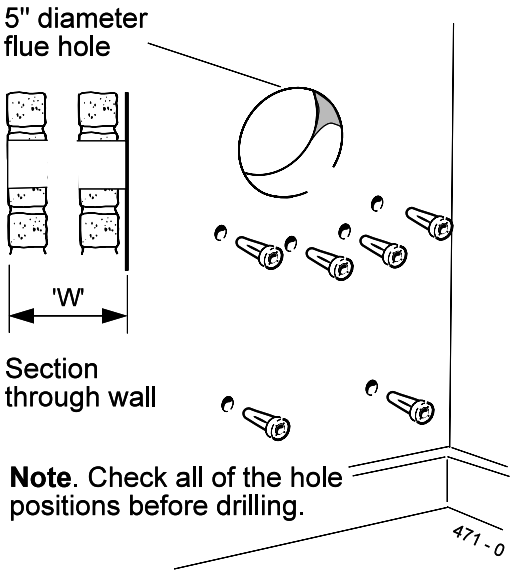

REAR FLUE OUTLET

REAR FLUE OUTLET

14 FITTING THE WALL MOUNTING FRAME

Fit the wall mounting frame either:

a. Directly to the wall

- Insert wall plugs.
- Put the screws into the wall plugs and leave 10mm proud
- Hang the frame onto the screws and tighten up.

or

b. Use stand-off channels

(To allow pipework to be taken upwards).

- Insert wall plugs.
- Put the screws into the wall plugs and leave 10mm proud.
- Fasten each channel to the frame with the 6mm screws provided.
- Hang the channels and frame onto the screws and tighten up.

Note. *If the clearances above and below the boiler are less than the length of the pipes it will be necessary to position the pipes behind the wall mounting plate BEFORE the plate is screwed to the wall.*

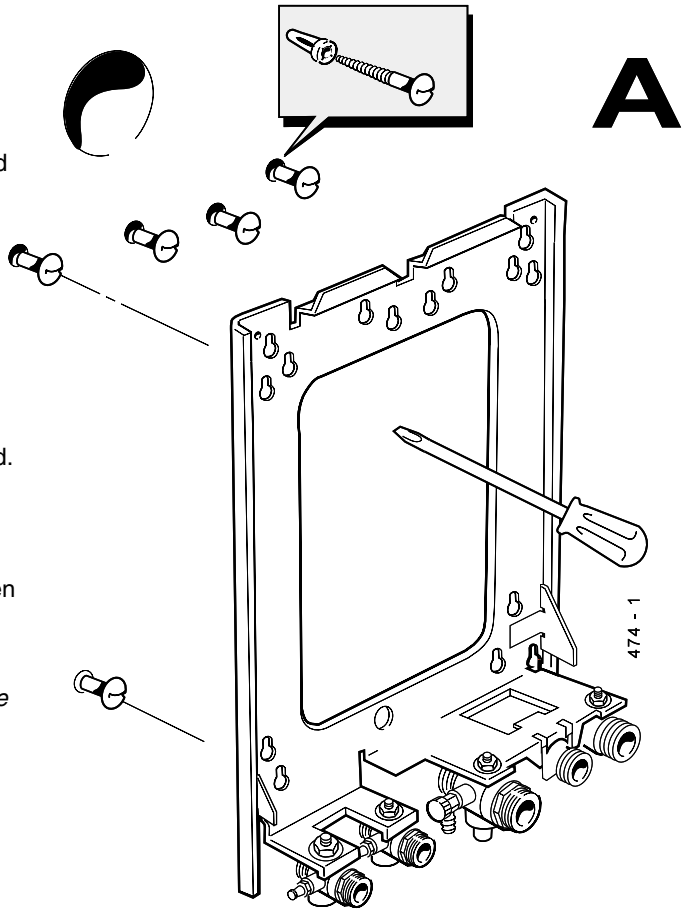

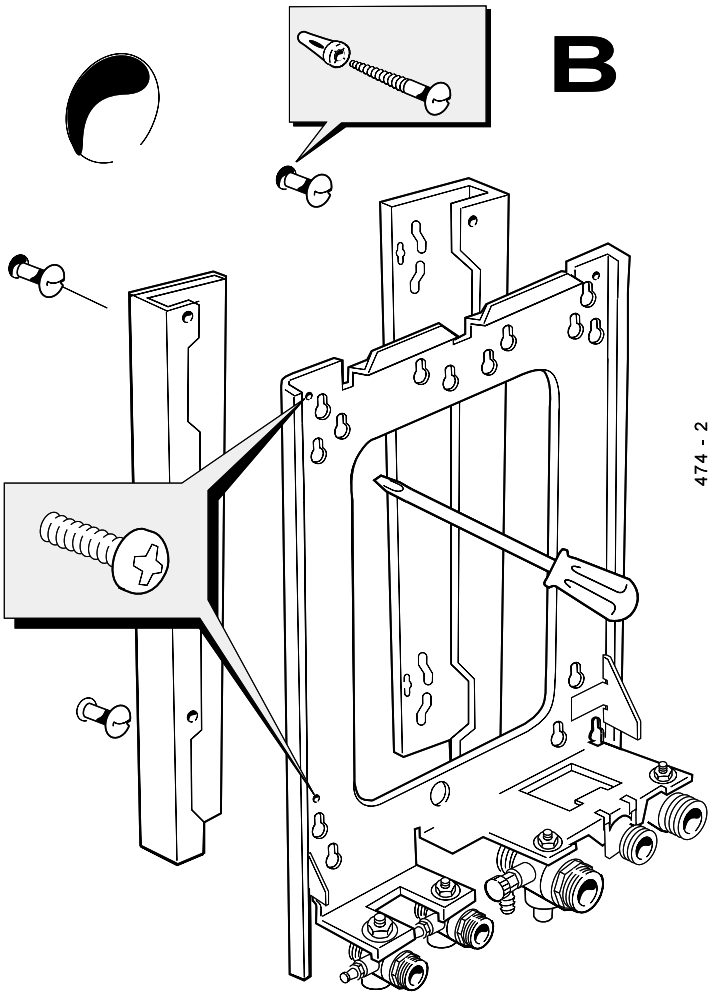

Showing the use of 'stand-off' channels, to enable upward pipework.

Make service water, gas & electrical connections. Go to Frames 35, 36 & 39 then return to Frame 15.

15 CUTTING THE FLUE - Wall thicknesses up to 600mm (23 5/8")

1. The flue cut length is calculated as detailed in Frame 10.
2. Measure from the groove and mark the tube.
3. To ensure the tube is cut square, mark the flue all the way round using (e.g). a long straight strip of paper with its ends overlapped.
4. Cut to length, using the cardboard support aid.
5. Remove the cardboard support and any burrs.

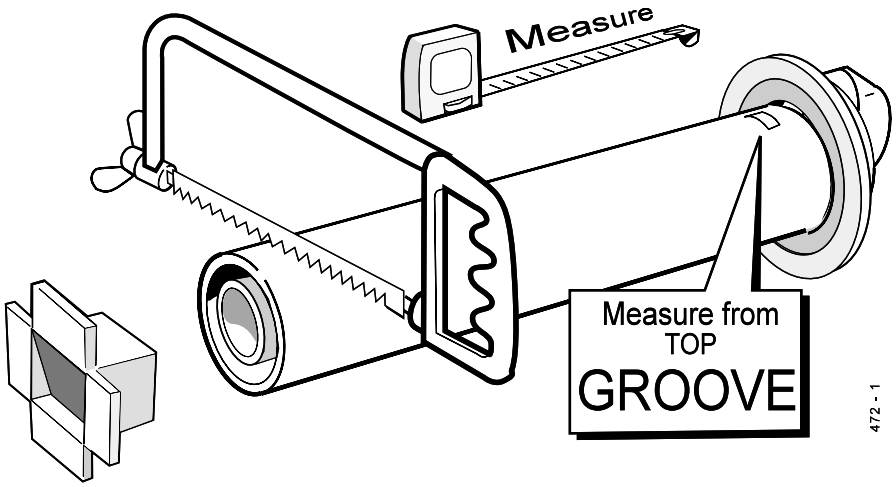

For flue lengths greater than 600mm (23 5/8") refer to Frames 30 to 32 - Flue Extension Ducts

16 FITTING THE FLUE

IMPORTANT
To facilitate turret fixing or removal do NOT make good the wall.

1. Attach the clamping/sealing rings to the flue (this prevents the assembly being pushed right through the hole and causing an accident).
2. Pass the cut flue through the prepared hole, ensuring that the groove is uppermost.
3. Pull the flue back to compress the rubber seal and fix in place with the clamping/sealing rings.

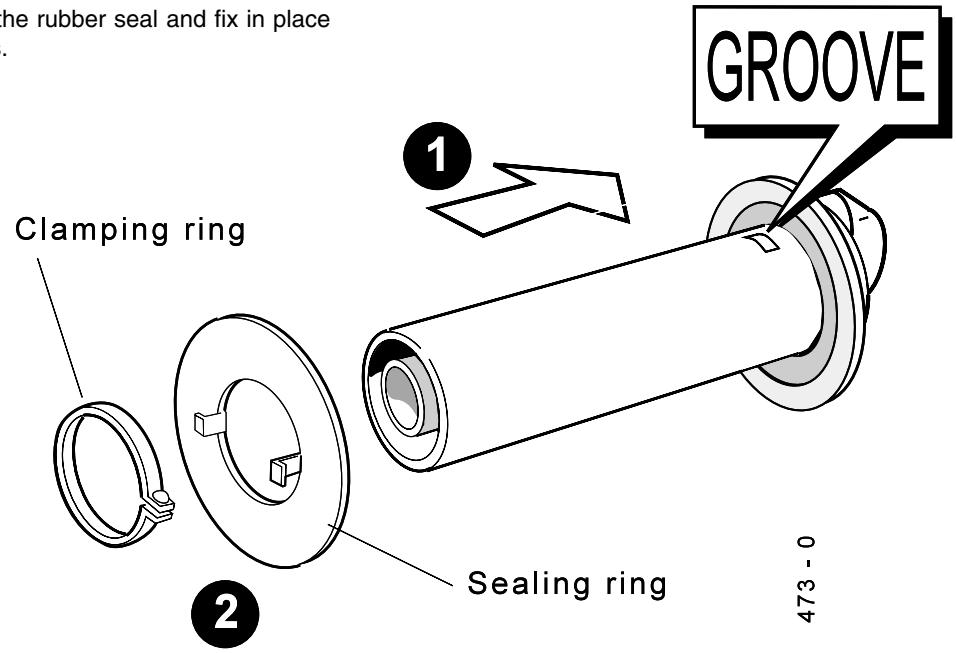

REAR FLUE OUTLET

17 MOUNTING THE BOILER

1. The boiler may be prewired to the loose electrical connector and secured with the cable clamps. Refer to Frame 39.
2. ***WARNING. ENSURE* that the plastic plugs are removed from both the DHW and CH pipes before mounting.**
   N.B. Some spillage of water may occur from the pipework when mounting the boiler to the frame.
3. Lift the boiler onto the wall mounting frame, locating it over the tabs at the top of the frame.
4. Lower the boiler into position.
5. Remove the bottom panel to access service connections.
6. Fit the filter to the DHW inlet valve, as shown.
7. Using the correctly sized fibre washers supplied in the hardware pack, engage and then tighten the 4 water unions.
8. Engage and tighten the gas union.
9. Fix the pipe and fibre washer to the safety drain outlet which is supplied in the boiler hardware pack.

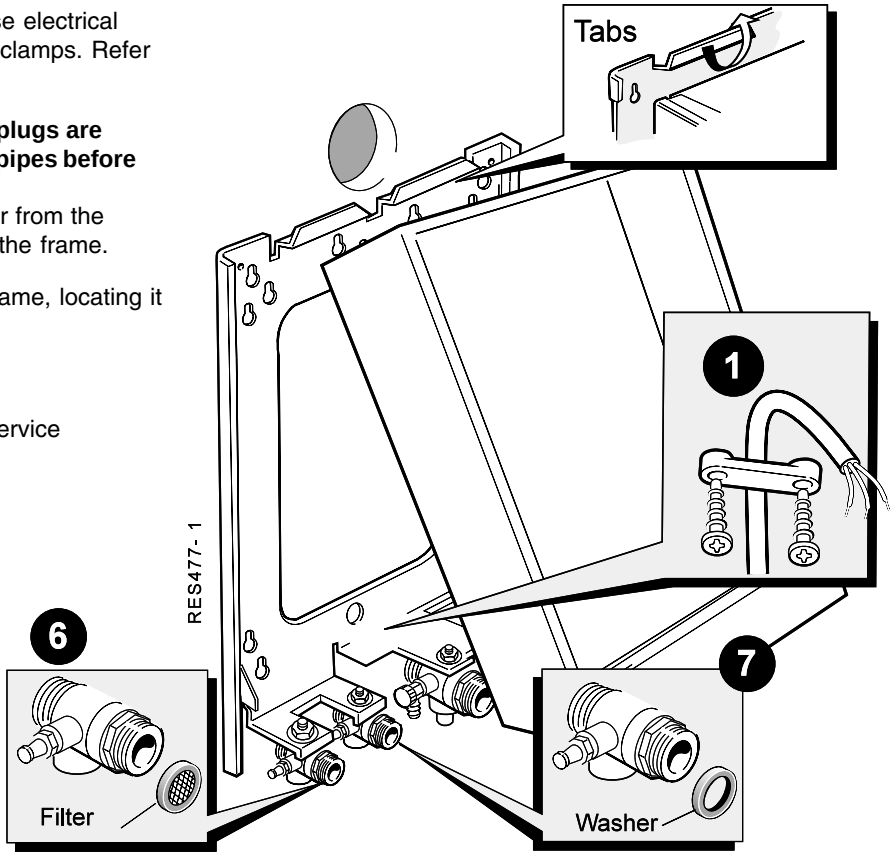

18 CONNECTING THE TURRET TO THE BOILER

1. Mate the turret to the flue.
2. Secure the flue turret on top of the boiler by inserting the open ends of the turret clamp under the 2 studs and fixing it in the middle with the single M5 x 10mm pozi-hex screw provided.
3. Drill a 3.2mm hole through the flue via the hole already present in the turret. Secure the turret to the flue, using the self-tapping screw provided.

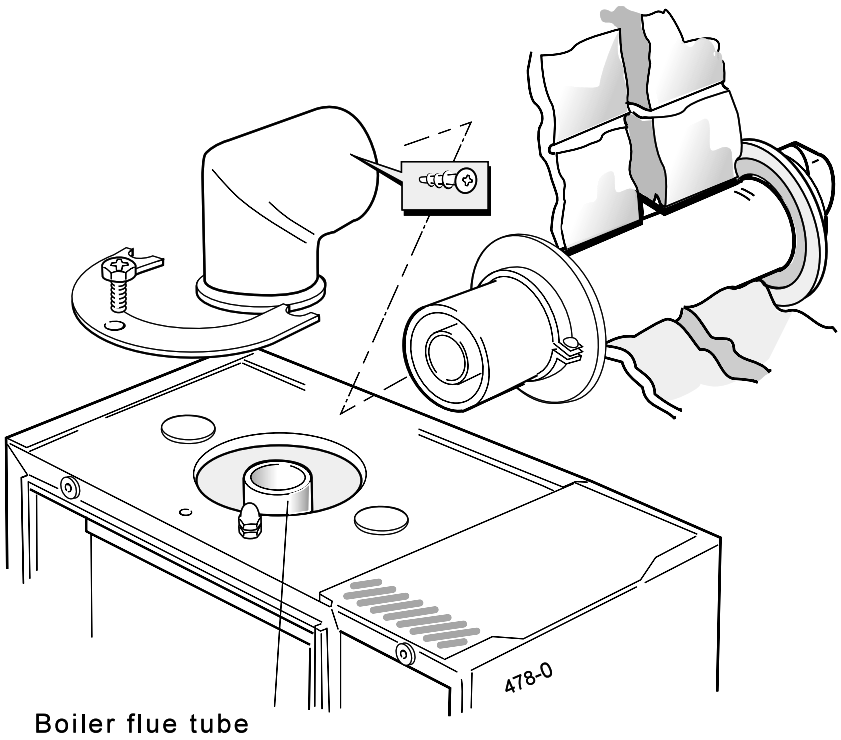

19 TERMINAL WALL PLATE

This plate allows neat concealment and full compression of the rubber seal. It should be used, where practicable::

a. When the wall is more than 24" thick (to support the flue weight and prevent movement).

or

b. When the hole has not broken through neatly.

or

c. When the wall face is rough and the rubber seal on its own would be ineffective.

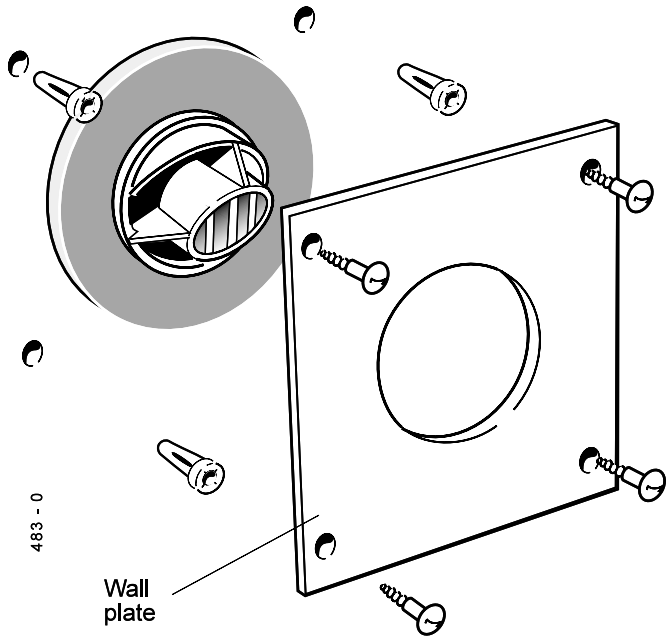

1. Position the terminal wall plate over the terminal.
2. Drill 4 fixing holes with a 7mm (1/4") masonry drill.
3. Insert the 4 plastic plugs provided in flue pack B.
4. Secure the plate with 4 of the No.10 x 2" screws provided in flue pack B.

Note. *If the terminal is less than 2m (6' 6") above ground level, an approved terminal guard should be fitted. Refer to 'Flue Installation', Page 7.*

20 SIDE FLUE ASSEMBLY - Exploded View

1. An optional flue duct extension kit is required for wall thicknesses greater than:

   504mm (19 7/8") - LHS flue
   380mm (15") - RHS flue

   Refer to Frame 10.

2. When cutting the ducts always use the cardboard support cutting aid provided.

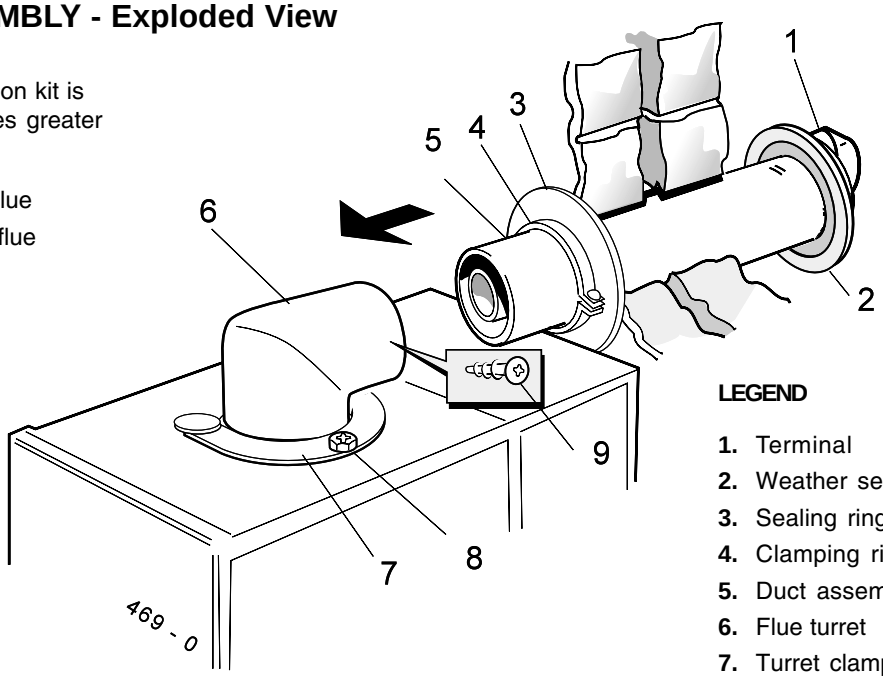

LEGEND

1. Terminal
2. Weather seal
3. Sealing ring
4. Clamping ring
5. Duct assembly
6. Flue turret
7. Turret clamp
8. M5 x 10 pozi-hex screw
9. No. 8 x 8 fixing screw

21 WALL MOUNTING TEMPLATE (Side Flue)

IMPORTANT.
For direct mounting (frame on wall) choose one black dot in each group.
If using the stand-off channels choose one circle in each group.
Care MUST be taken to ensure the correct holes are drilled.

Note.
When marking off the flue allow for the stand-off channels if using them. Read the notes on the template.

1. Tape template into the selected position.
2. Ensure squareness by hanging a plumbline, as shown.
3. Mark onto the wall the following:
   a. The 6 wall mounting plate screw positions (choose one from each group).
   b. Extended the centre line as shown. Mark the flue duct centre from the corner (see diagram and template).

   Note. *Mark the centre of the hole as well as the circumference.*
4. Remove template from the wall.

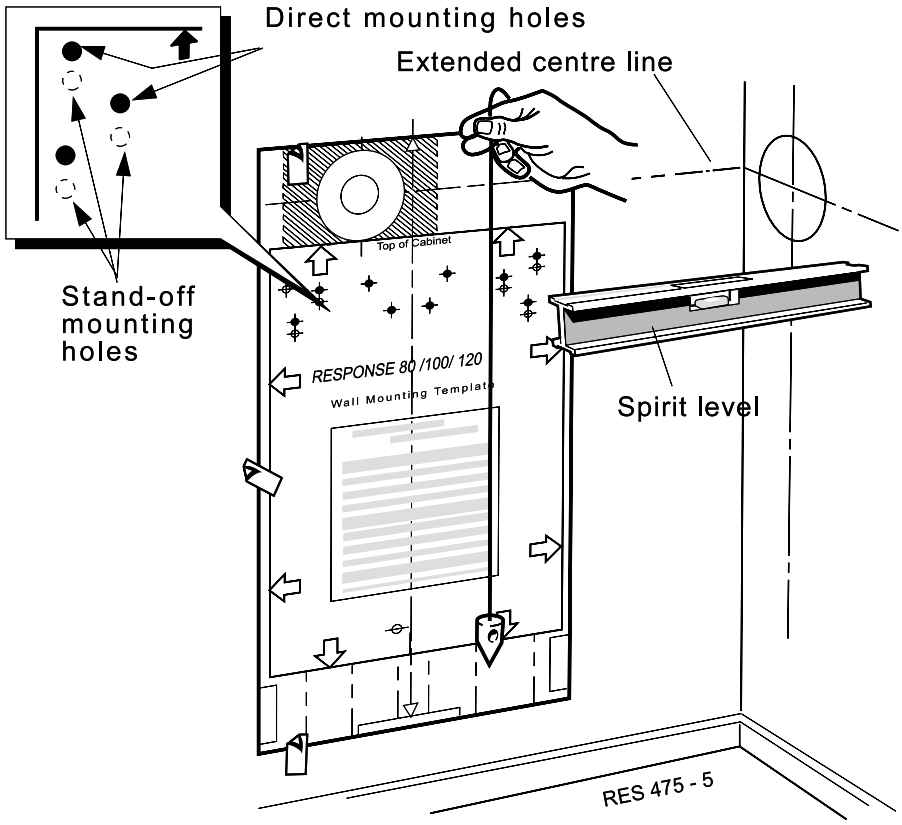

22 DRILLING THE WALL (Side Flue)

IMPORTANT. Ensure that, during the cutting operation, masonry falling outside the building does not cause damage or personal injury.

1. Cut the flue hole (preferably with a 5" core boring tool), ensuring that the hole is square to the wall.

   Both wall faces immediately around the cut hole should be flat.

2. Measure and note the wall thickness 'W'.

3. Drill 6 holes with an 8mm (5/16") masonry drill.

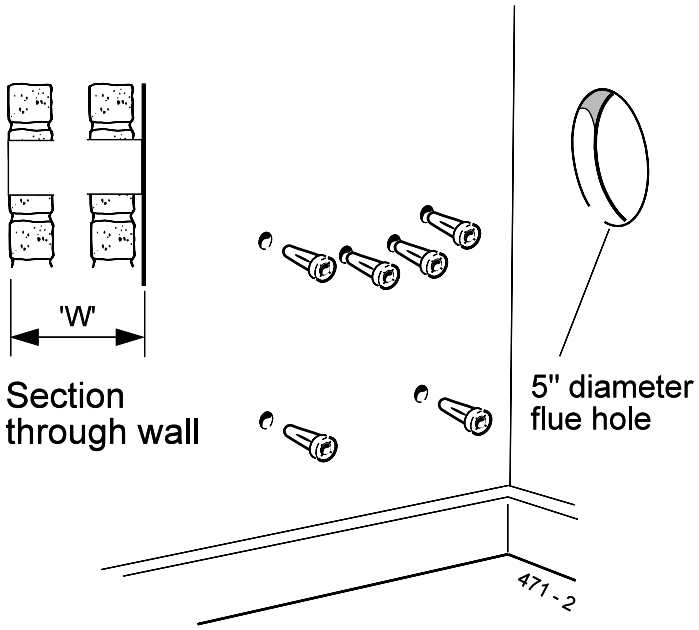

Note. *If the terminal is to be sited within 25-40mm of a corner or vertical pipe (refer to Table 3) then the hole MUST be accurately cut and the rubber weather seal trimmed around the groove provided. (The terminal wall plate need not be fitted.)*

23 FITTING THE WALL MOUNTING FRAME

Fit the wall mounting frame, either:

a. Directly to the wall

- Insert the wall plugs.
- Put the screws into the wall plugs and leave 10mm proud
- Hang the frame onto the screws and tighten up

or

Proceed to Frame 24.

Note. *If the clearances above and below the boiler are less than the length of the pipes it will be necessary to position the pipes behind the wall mounting plate BEFORE the plate is screwed to the wall.*

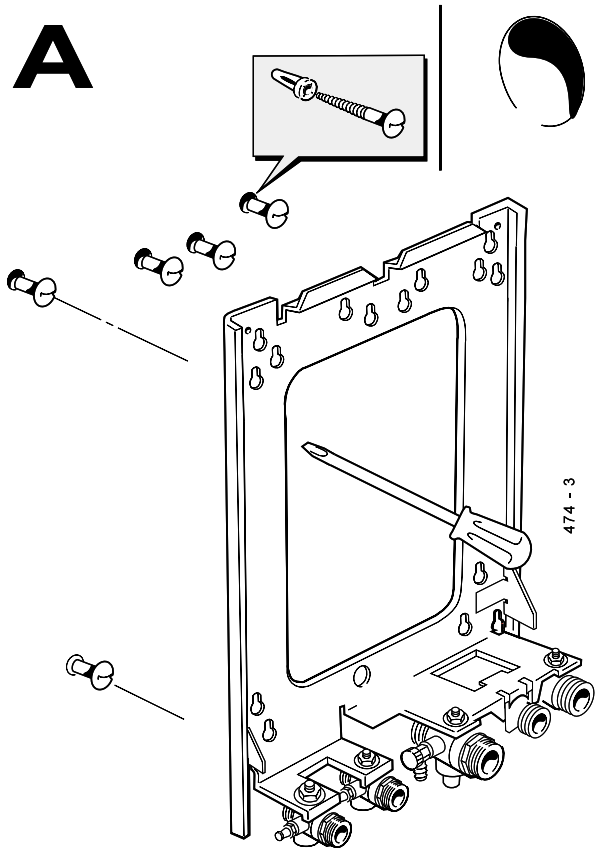

Make service water, gas & electrical connections. Go to Frames 35, 36 & 39 then return to Frame 15.

24 FITTING THE WALL MOUNTING FRAME - continued

or

b. Use stand-off channels
(To allow pipework to be taken upwards).

- Insert the wall plugs.
- Put the screws into the wall plugs and leave 10mm proud.
- Fasten each channel to the frame with the 6mm screws provided.
- Hang channels and frame onto the screws and tighten up.

Note. *If the clearances above and below the boiler are less than the length of the pipes it will be necessary to position the pipes behind the wall mounting plate BEFORE the plate is screwed to the wall.*

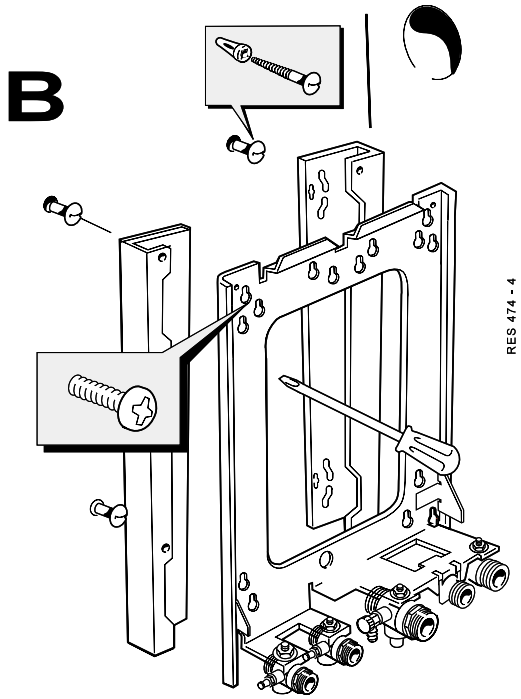

Make service water, gas & electrical connections. Go to Frames 35, 36 & 39 then return to Frame 15.

25 CUTTING THE FLUE TO LENGTH

Flues up to 600mm (23 5/8")

1. The flue cut length is calculated as detailed in Frame 10.
2. Measure from the groove and mark the tube.
3. To ensure the tube is cut square, mark the flue all the way round, using, e.g. a long straight strip of paper with its ends overlapped.
4. Cut to length, using the cardboard support aid.
5. Remove the cardboard support and any burrs.

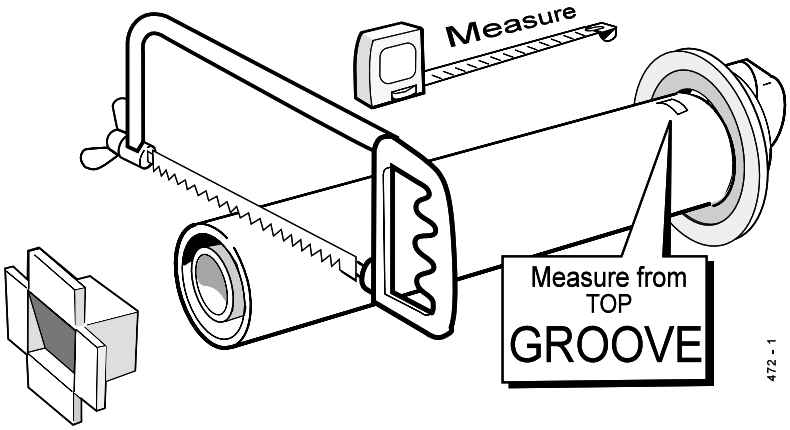

For flue lengths greater than 600mm refer to Frames 30 to 32 - Flue Extension Ducts

26 FITTING THE FLUE

1. Attach the clamping/sealing rings to the flue (this prevents the assembly being pushed right through the hole and causing an accident).
2. Pass the cut flue through the prepared hole, ensuring that the groove is uppermost.
3. Pull the flue back to compress the rubber seal and fix in place with the clamping/sealing rings.

Note.

*To facilitate turret fixing or removal do **NOT** make good the wall.*

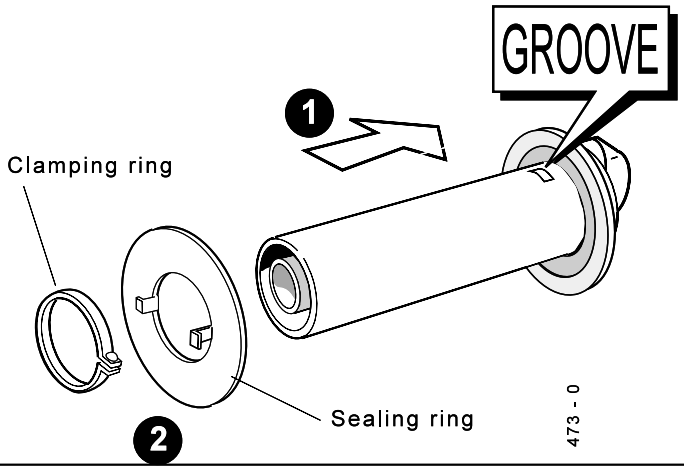

27 MOUNTING THE BOILER

1. The boiler may be prewired to the loose electrical connector and secured with the cable clamps. Refer to Frame 39.
2. **WARNING. Ensure that the plastic plugs are removed from both the DHW and CH pipes before mounting.**
   N.B. Some spillage of water may occur from the pipework when mounting the boiler to the frame.
3. Lift the boiler onto the wall mounting frame, locating it over the tabs at the top of the frame.
4. Lower the boiler into position.
5. Remove the bottom panel to access service connections.
6. Fit the filter to the DHW inlet valve, as shown.
7. Using the correctly sized fibre washers supplied in the hardware pack, engage and then tighten the 4 water unions.
8. Engage and tighten the gas union.
9. Fix the pipe and fibre washer to the safety drain outlet which is supplied in the boiler hardware pack.

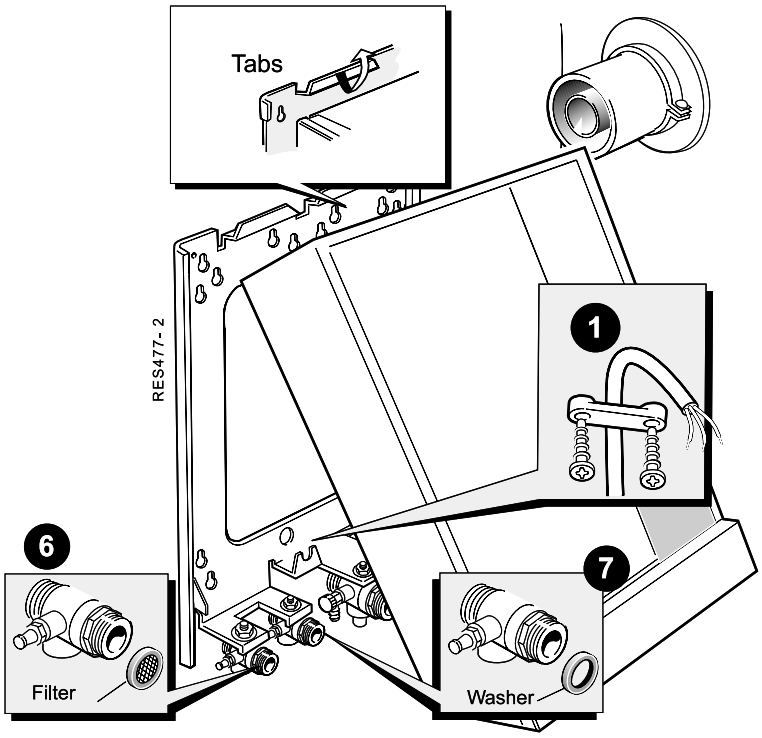

28 CONNECTING THE TURRET TO THE BOILER

1. Mate the turret to the flue.
2. Secure the flue turret on top of the boiler by inserting the open ends of the turret clamp under the 2 studs and fixing it in the middle with the single M5 x 10mm pozi-hex screw provided.
3. Drill a 3.2mm hole through the flue via the hole already present in the turret. Secure the turret to the flue, using the self tapping screw provided.

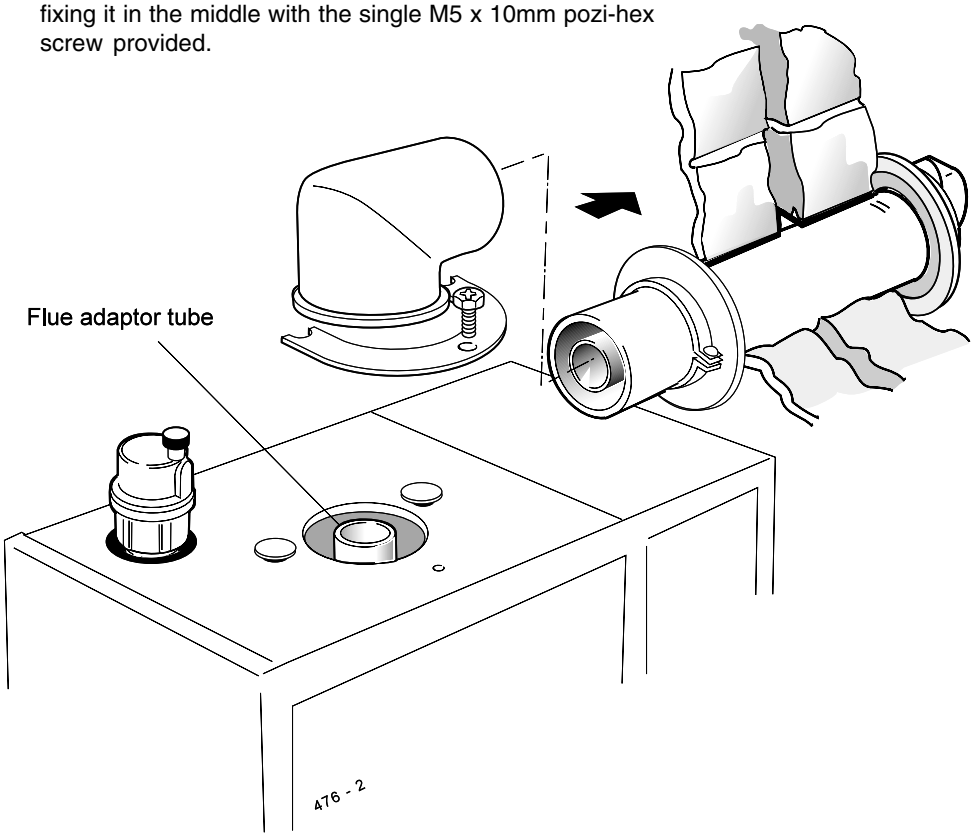

4. **Flues over 1 metre long**

   Fix the flue support bracket to the wall, using the wall plug and wood screw.

   - For standard installations use the short wood screw.
   - If the 'stand-off' option is used secure the support bracket, using the spacer bracket and long wood screw.

SIDE FLUE OUTLET

29 TERMINAL WALL PLATE

This plate allows neat concealment and full compression of the rubber seal. It should be used (where practicable):

a. When the wall is more than 24" thick (to support the flue weight and prevent movement).

or

b. When the hole has not broken through neatly.

or

c. When the wall face is rough and the rubber seal on its own would be ineffective.

1. Position the terminal wall plate over the terminal.

2. Drill 4 fixing holes with a 7mm (1/4") masonry drill.

3. Insert the 4 plastic plugs provided in flue pack B.

4. Secure the plate with 4 of the No.10 x 2" screws provided in flue pack B.

Note. *If the terminal is less than 2m (6' 6") above ground level, an approved terminal guard should be fitted.*
Refer to 'Flue Installation', Page 7.

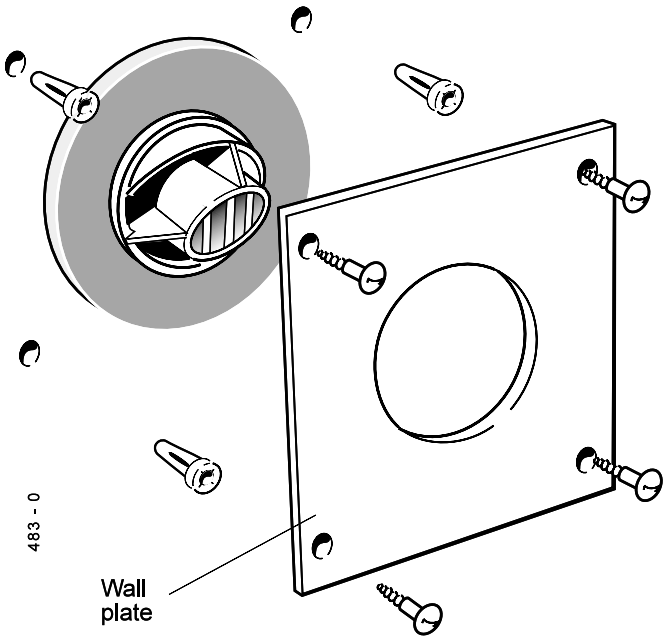

30 FLUE EXTENSION DUCT PACK D CONTENTS

Use a maximum of 3 extension ducts only for the 80 and a maximum of 4 extension ducts for the 100 and 120.

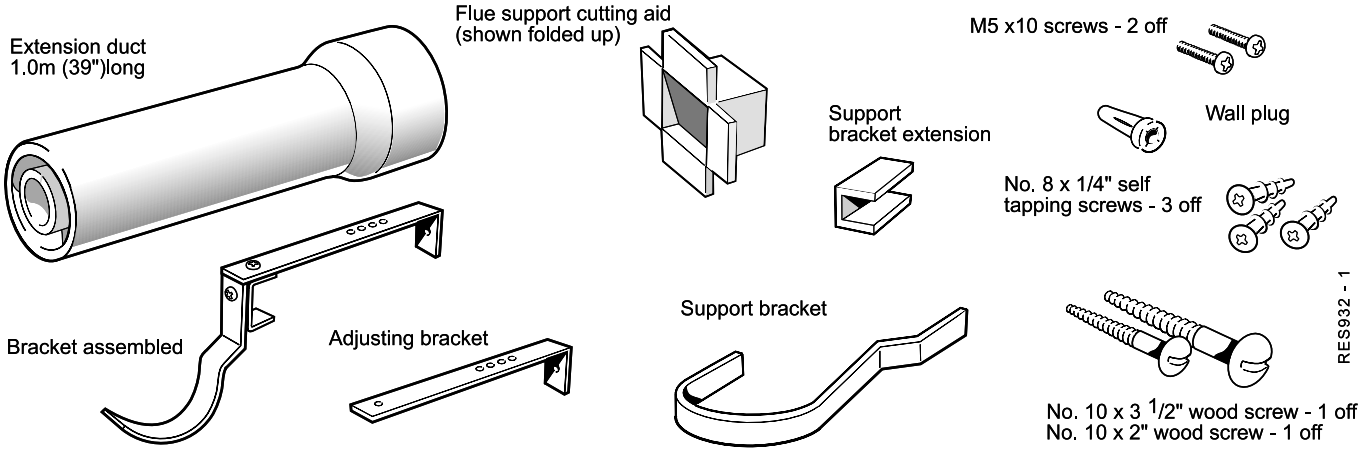

31 ASSEMBLING THE EXTENDED FLUE

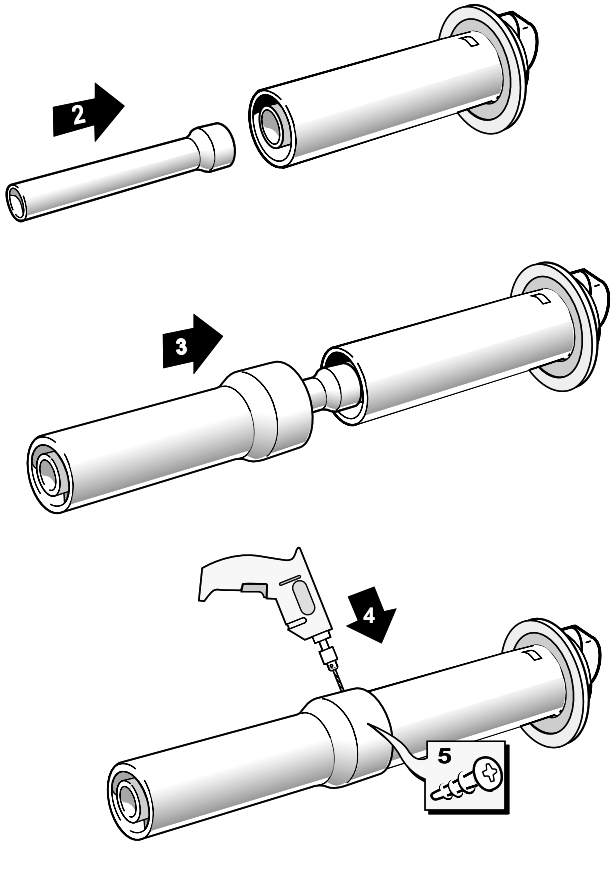

1. Remove the cardboard support aid from the flue and place safely to one side.
2. Fit the inner flue extension duct onto the inner flue duct.
3. Fit the outer flue extension duct onto the outer air duct.
4. Drill one 3.2mm (1/8") dia. hole through the outer air duct. ***Do not drill the inner flue duct.***
5. Insert the self tapping screw provided to fix the air duct in position.
6. Repeat steps 1-5 if a second flue extension is required.

32 CUTTING THE FLUE TO LENGTH

1. Check the flue length measurement made in Frame 10.
2. Use this dimension to mark the flue length, starting from the groove, as illustrated.
3. To ensure a square cut, mark the flue all the way round, using, e.g. a steel tape or paper strip with the ends overlapped.
4. Cut to length, using the cardboard support aid.
5. Remove the cardboard offcuts and de-burr the metal edges.
6. Mark round the air duct 10mm from the end.
7. Cut air duct only to be 10mm shorter than the flue duct to allow for the engagement.
8. Clean and de-burr ends of ducts.

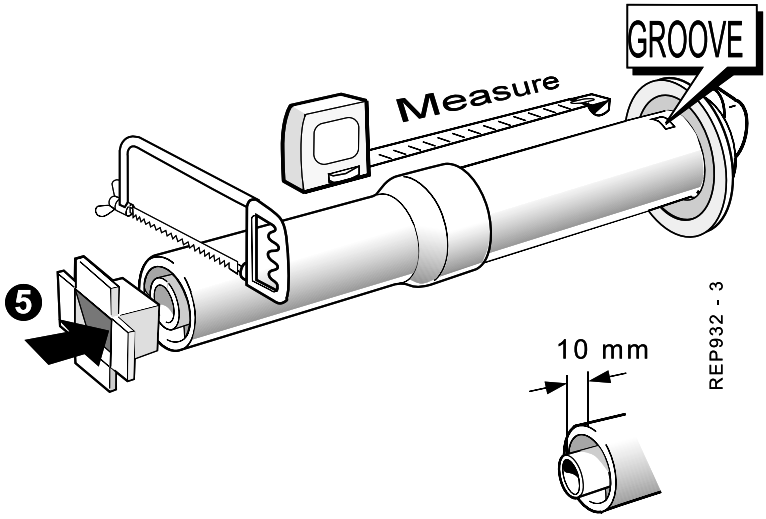

33 FIXING THE FLUE TO THE TURRET

1. Insert the flue into the prepared hole. Refer to Frame 26 for details.
2. Mate the flue to the turret. Refer to Frame 28 for details.

Note.
To facilitate turret fixing or removal do ***NOT*** *make good the wall.*

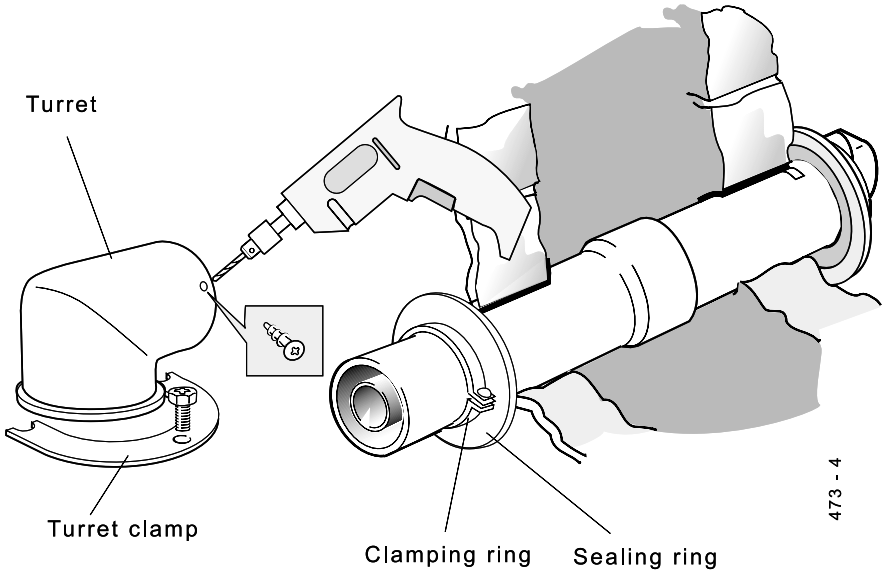

34 SERVICE CONNECTIONS

General Notes

1. As detailed in Frames 14 and 23/24 'Fitting the Wall Mounting Frame', top entry pipework is an option, as well as mounting from the bottom or through the wall.

   If pipes are run vertically within the boiler back space provided by optional stand-off channel positions they must avoid any obstructions imposed by the channels and by a rear facing flue, should this position be selected.

2. Horizontal connecting pipes, where used, must be run outside the limits of the boiler casing.

35 WATER CONNECTIONS

Refer to General Note, Frame 34, for guidance.

Note. *Do not subject any of the isolating valves to heat as the seals may be damaged .*

For central heating loads greater than 60 000 BTU's the flow and return circuits should be increase to 28mm pipe diameter immediately upon leaving the boiler with the fitting supplied.

CH CONNECTIONS

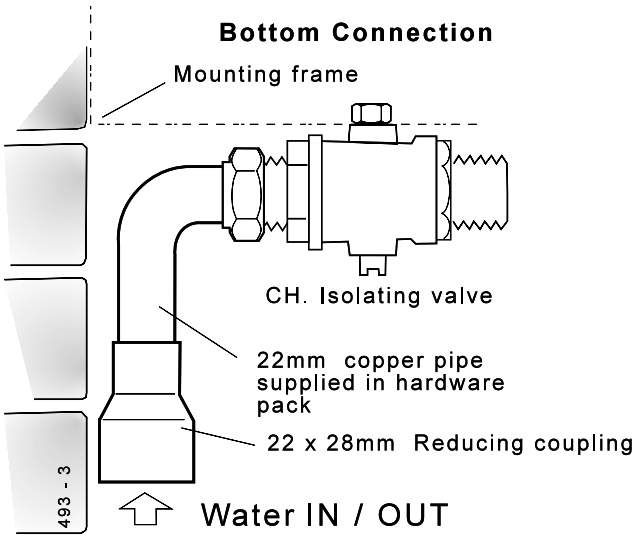

For top connections: reverse 22mm pipe.

DHW CONNECTIONS

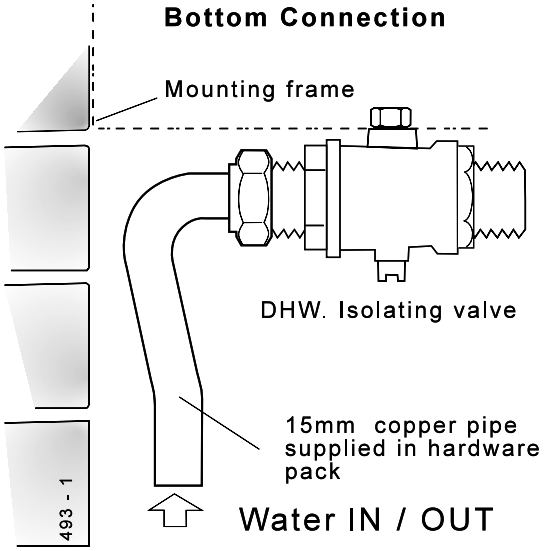

For top connections:
use 15mm straight pipe and elbow (not supplied).

36 GAS CONNECTION

Refer to General Note, Frame 34, for guidance.

Bottom connection

1a. Solder the 1/2" connector and reducing coupling to the preformed pipe provided ***OR***

Top connection

1b. Solder the 1/2" connector and reducing coupling to the preformed pipe provided.

Bottom and Top connections

2. Remove the gas cock bracket complete with gas cock.

3. Screw connector into gas cock in the correct orientation.

4. Screw complete assembly back onto the mounting frame.

Extend a gas supply pipe of not less than 22mm O.D. copper or 3/4" BSP iron to the boiler.

A working gas pressure of 20mbar (8" w.g.) must be available at the boiler inlet with the boiler firing at full DHW output.

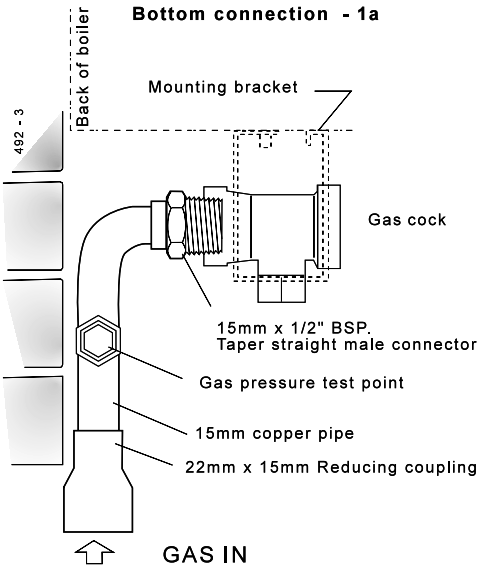

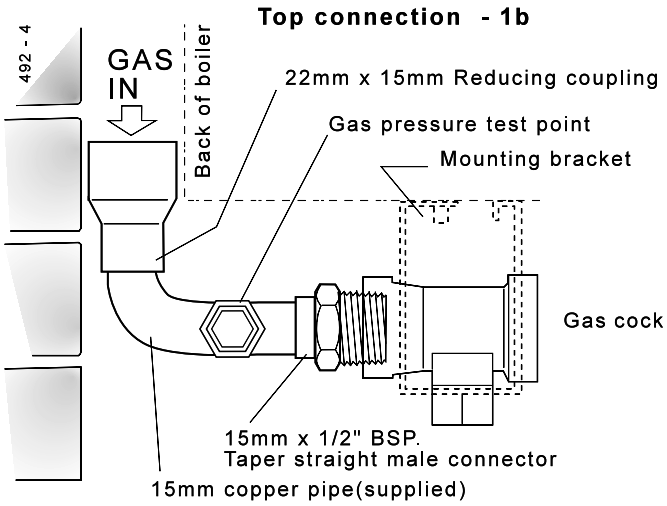

IMPORTANT. Ensure the gas supply pipework is adequate - see Table 5 page 8.

37 SAFETY VALVE DRAIN

The discharge pipe should be positioned so that the discharge of water or steam cannot create a hazard to the occupants of the premises or damage to electrical components and wiring.

38 ELECTRICAL CONNECTIONS

WARNING. This appliance MUST be efficiently earthed

A mains supply of 230 V ~ 50 Hz is required.

The fuse rating should be 3 A.

All external controls and wiring MUST be suitable for mains voltage. Wiring should be 3 core PVC insulated flexible cord NOT LESS than 0.75 mm^2 (24 x 0.2mm) and to BS. 6500, Table 16. *(0.5mm^2 flex is NOT acceptable - for mechanical, not electrical - reasons.)*

Wiring external to the boiler MUST be in accordance with the current I.E.E. (BS7671) Wiring Regulations and any local regulations.

Connection must be made in a way that allows complete isolation of the electrical supply - such as a double pole switch, having a 3mm (1/8") contact separation in both poles, or a plug and socket serving only the boiler and system controls.
The means of isolation must be accessible to the user after installation.

39 INTERNAL WIRING

Note. *If the programmer kit is to be fitted, refer to the instructions provided with the kit, and Frame 40.*

A pictorial wiring diagram is shown in Frame 40.

1. Ensure a length of 200mm between the wall and the connector. Fix the cable(s) to the mounting frame with the clamp(s).
2. Wire the mains cable into the connector terminal strip (supplied in the hardware pack).
3. Offer the connector to its mating half inside the boiler. Secure the connector to the panel with the screw.

Incoming mains wiring detail

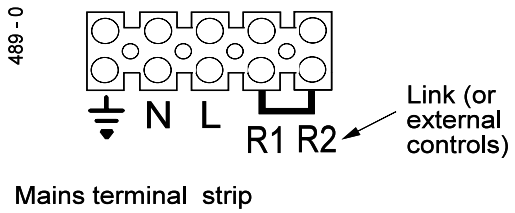

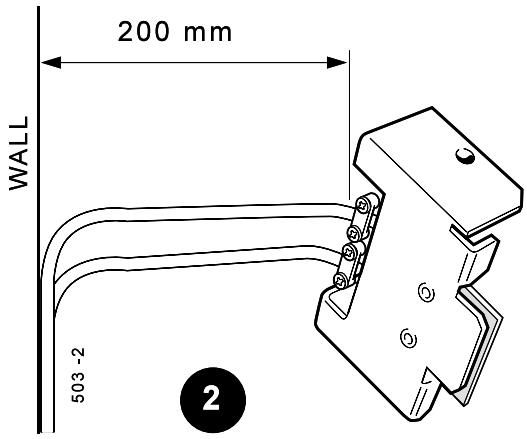

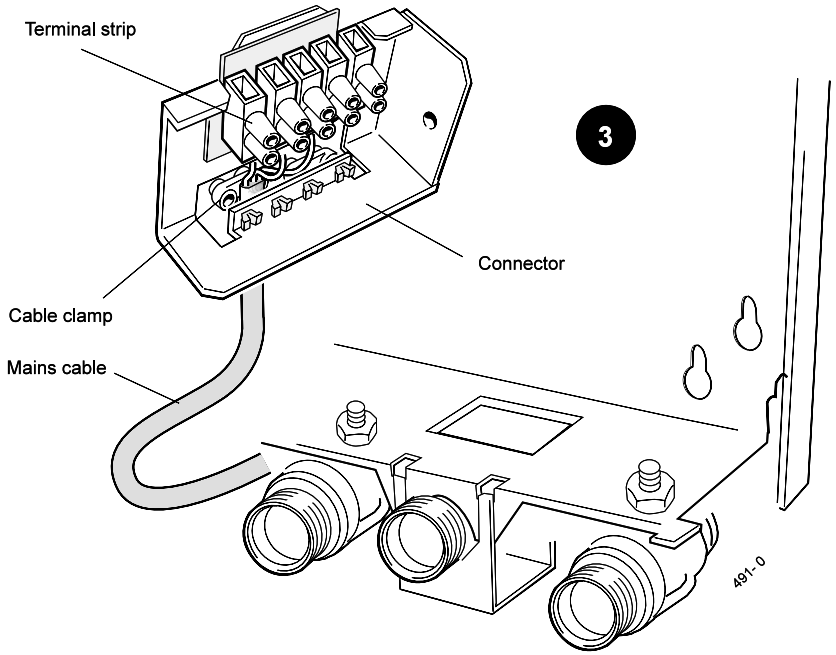

Note. *Ensure that the lengths of the current conductors are shorter than the earth conductor so that if the cable slips in its anchorage the current carrying conductors become taut before the earth conductor.*

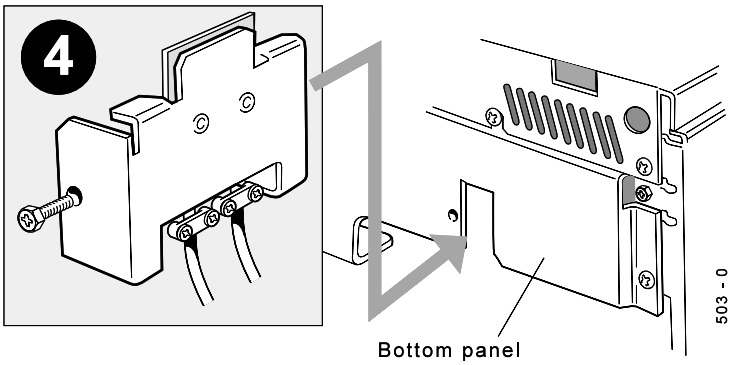

40 PICTORIAL WIRING

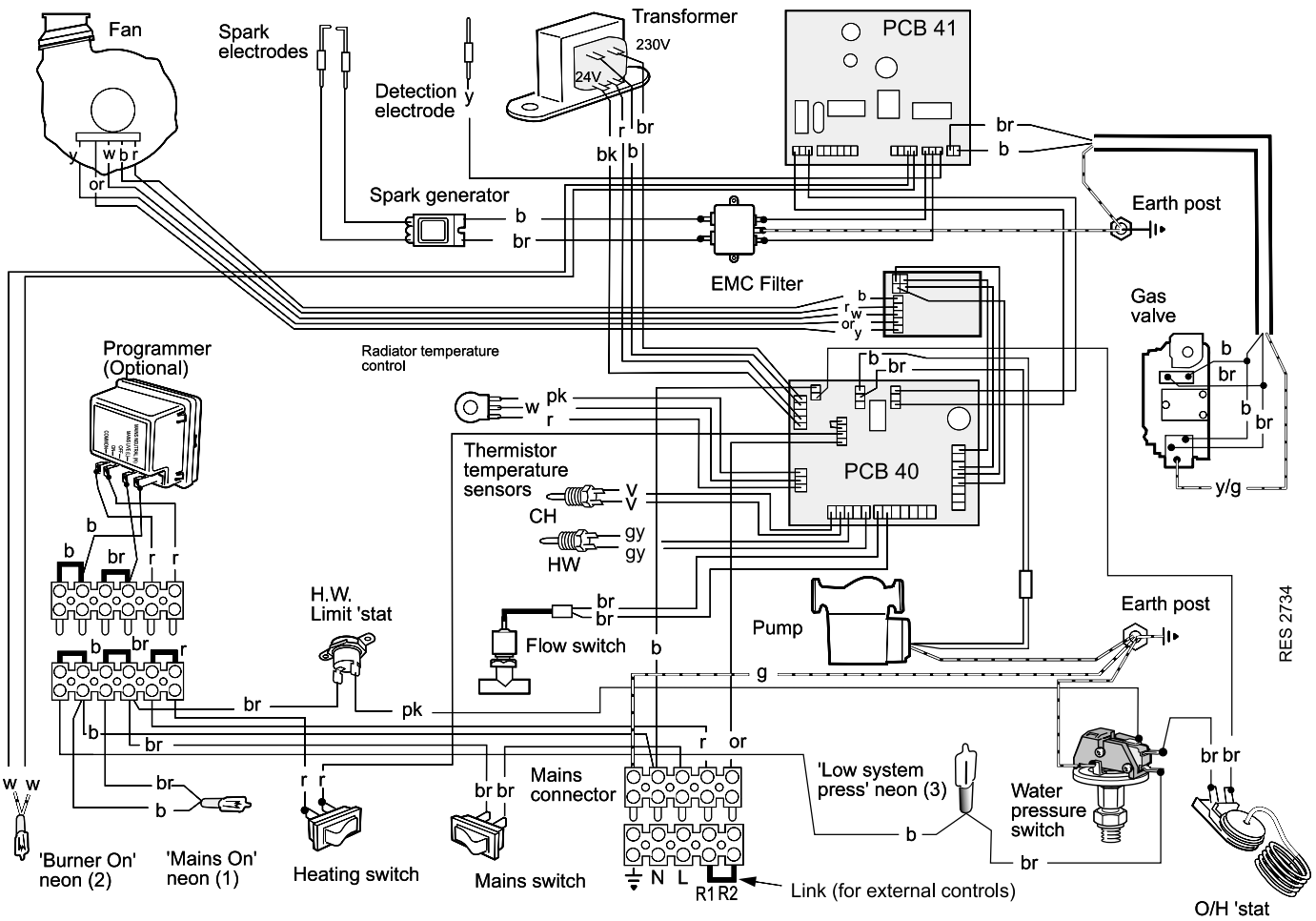

LEGEND

b - blue	**br** - brown	**pk** - pink	**w** - white
bk - black	**gy** - grey	**r** - red	**y** - yellow
	or - orange	**v** - violet	**y/g** - yellow/green

41 FUNCTIONAL FLOW WIRING DIAGRAM

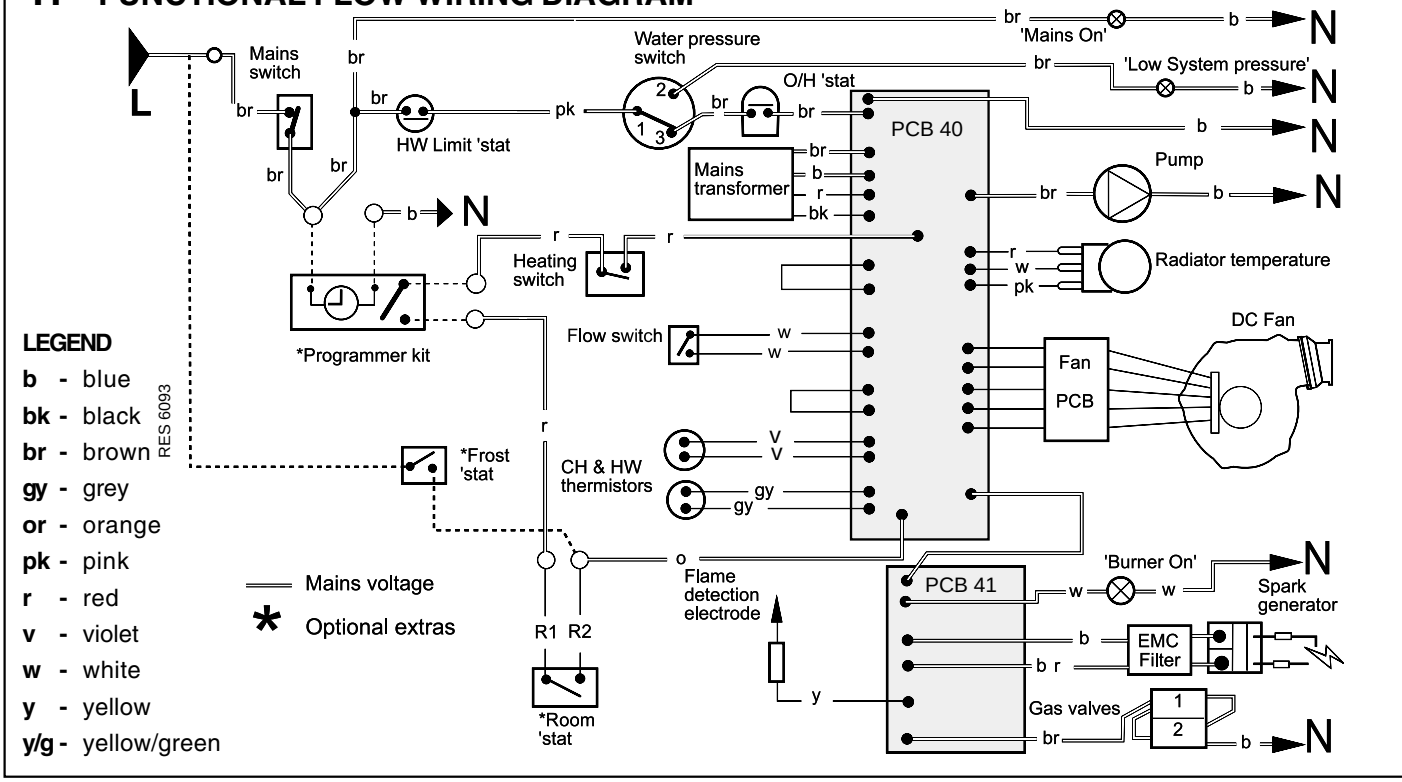

LEGEND

b - blue
bk - black
br - brown
gy - grey
or - orange
pk - pink
r - red
v - violet
w - white
y - yellow
y/g - yellow/green

42 EXTERNAL ELECTRICAL CONTROLS

Earths are not shown for clarity but must never be omitted.

Wiring External to the Boiler

WARNING. This appliance must be efficiently earthed.

A mains supply of 230 V ~ 50 Hz is required.

The fuse rating should be 3A.

Wiring external to the boiler MUST be in accordance with the current I.E.E. (BS.7671) Wiring Regulations and any local regulations.

All external controls and wiring must be suitable for mains voltage.

Wiring should be 3 core PVC insulated cable, not less than 0.75 mm^2 (24 x 0.2mm).

Wiring external to the boiler MUST be in accordance with the current wiring regulations and any local regulations.

Connection must be made in a way that allows complete isolation of the electrical supply such as a double pole switch having a 3mm (1/8") contact separation in both poles, or a plug and socket, serving only the boiler and system controls. The means of isolation must be accessible to the user after installation.

Internal Programmer

The **Ideal Programmer Kit** is supplied with its own instructions. Associated controls should be wired as shown in Diagram A.

External Single Channel Programmer

This should be wired as shown in Diagram B

External Two Channel Programmer

This should be wired as shown in Diagram C. The power to the programmer should be isolated with the same switch that isolates power to the boiler, otherwise the boiler can be left live, even when the boiler isolating switch is off. Using a two channel programmer will disable the heating switch.

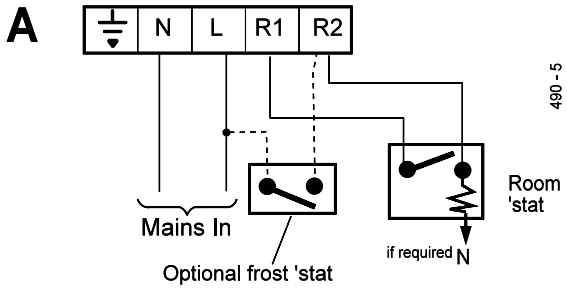

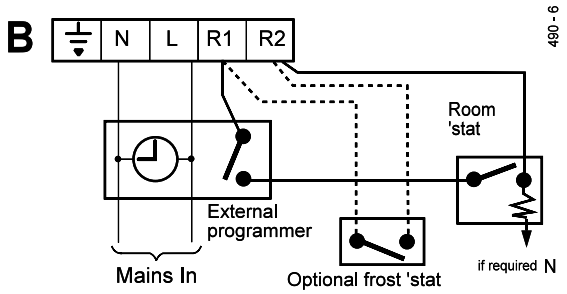

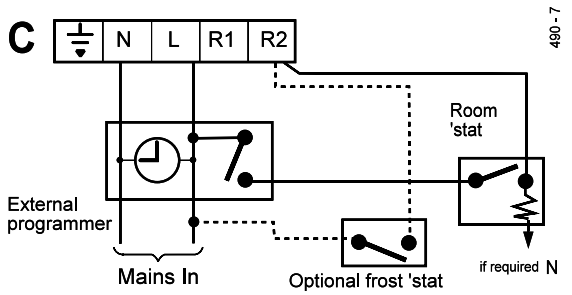

N.B. *These diagrams are schematic only and do not show external terminal strips etc.*

Room Thermostat

It is recommended to use a room thermostat in conjunction with the boiler to give the most efficient boiler performance and the most comfortable central heating performance. The room thermostat should be wired (depending on the programmer option) as either diagram A, B or C. The boiler will operate without a room thermostat by using the central heating temperature control to vary the flow temperature between 70 °C and 82 °C (± 5 °C.)

Frost Thermostat

Central heating systems fitted wholly inside the house do not normally require frost protection as the house acts as a 'storage heater' and can normally be left at least 24 hours without frost damage.

However, if parts of the pipework run outside the house or if the boiler will be left off for more than a day or so then a frost thermostat should be wired into the system.

The frost thermostat should be sited in a cold place but where it can sense heat from the system.

Wiring should be as shown.

Note. If *the boiler is installed in a garage it may be necessary to fit a pipe thermostat, preferably on the return pipework.*

43 COMMISSIONING AND TESTING

A. ELECTRICAL INSTALLATION

1. Checks to ensure electrical safety should be carried out by a competent person.
2. ALWAYS carry out the preliminary electrical system checks, i.e. earth continuity, **POLARITY**, resistance to earth and short circuit, using a suitable test meter.

B. GAS INSTALLATION

The whole of the gas installation, including the meter, should be inspected and tested for soundness and purged in accordance with the recommendations of BS. 6891. **i.e.** not less than 5 times the capacity per revolution of the gas meter mechanism.

WARNING. Whilst effecting the required gas soundness test and purging air from the gas installation, open all windows and doors, extinguish naked lights and DO NOT SMOKE.

44 INITIAL LIGHTING

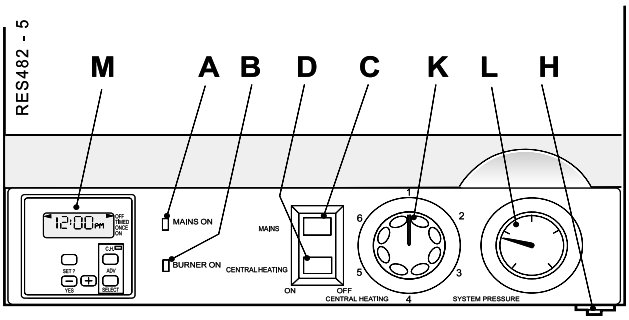

The illustration is shown with the control door removed.

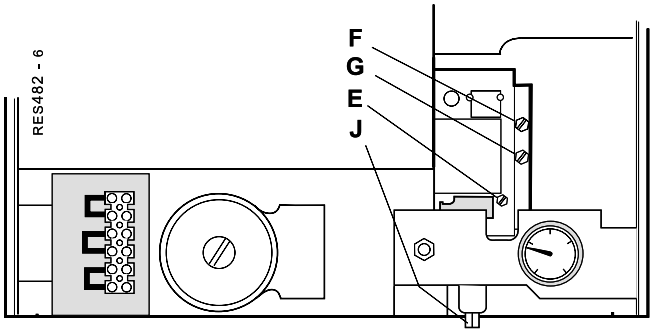

The illustration is shown with the control & front panel removed.

LEGEND

A 'Mains on' neon.
B 'Burner on' neon.
C Boiler (on/off) switch.
D Heating switch.
E Burner pressure test point.
F Signal pressure test point (Lo).
G Signal pressure test point (Hi)-fan.
H Overheat thermostat reset button.
J Gas service cock.
K Heating control knob.
L Pressure gauge.
M Programmer display (optional).

IMPORTANT.

Before lighting the boiler you should note especially that:

a. To extract maximum heat from the boiler, a 2 minute pump overrun period occurs after each heating cycle (unless immediately followed by DHW draw off).

b. During this period the boiler *will not restart for CH*, even if the room thermostat is calling - this prevents short cycling and thus is more efficient.

c. The 2 minute period can be curtailed by running a hot tap for a few seconds or turning the mains off briefly.

d. At the end of each period of DHW draw-off the pump will run for few seconds, to extract the residual heat from the heat exchanger.

e. Provided that the mains supply switches are left ON, the pump will run for at least 30 seconds each day (even if neither CH nor DHW is in use), as a self-checking measure.

1. Check that all the drain cocks are closed and any valves in the flow and return are open. Open the dust cap on the auto air vent (see Frame 1) by one turn.

2. Check that the system has been filled and pressurised (see Frame 4) and that the boiler is not air locked.

3. Check that the overheat thermostat (H) is calling for heat - press the reset button.

4. Remove boiler front panel. Refer to Frame 48.

5. Remove the screw in the burner pressure test point (E) - located behind the lower front panel - and connect a gas pressure gauge via a flexible tube.
Be sure to select the correct pressure test point. Refer to Tables 2 & 3 on page 3 for pressures.

6. Check that the gas service cock (J) is ON.

7. Switch the electricity supply ON and check that all external controls are calling for heat.

8. Set the boiler (on/off) switch (C) and the heating switch (D) to 'ON'. Following a pre-purge period the gas control solenoid valve should open and the spark commence, continuing until the burner is established.

9. Check that the burner lights smoothly and that the 'Burner on' neon (B) illuminates. The boiler will attempt 4 ignitions. If the burner does not light after the 4 attempts, turn the on/off switch to OFF, wait for 5 seconds then try again. If the burner still does not light refer to the 'Fault Finding' section.

10. Test for gas soundness around ALL boiler gas components, using leak detection fluid.

11. Operate the boiler for 10 minutes to stabilise the burner temperature.

12. The burner pressure is regulated by the gas valve according to the air flow produced by the fan. ***It is NOT user-adjustable*. Any interference to sealed settings on the gas valve will adversely affect operation and render our warranty void.**

However you should check that the inlet pressure (see Frame 36) is at least 20 mbar **when the boiler is firing.**

13. Set the boiler (on/off) switch (C) to OFF.

14. Remove the pressure gauge and tube. Replace the sealing screw in the pressure test point. Ensure a gas tight seal is made.

15. Refit the boiler front panel, using the screw previously removed.

16. Switch the boiler on again.

45 GENERAL CHECKS

Make the following checks for correct operation:

1. **Hot water**
   - **a.** Fully open all DHW taps in turn and ensure that water flows freely from them.
   - **b.** Close all taps except the furthest one from the boiler and check that the boiler is firing at maximum rate.
   - **c.** Check DHW flow rate and **ADJUST** to requirements with boiler cold.
     To obtain best overall summer and winter water temperature and flow Caradon recommend setting at a temperature rise = 40°C . See Table below.
   - **d.** Turn off the DHW tap.

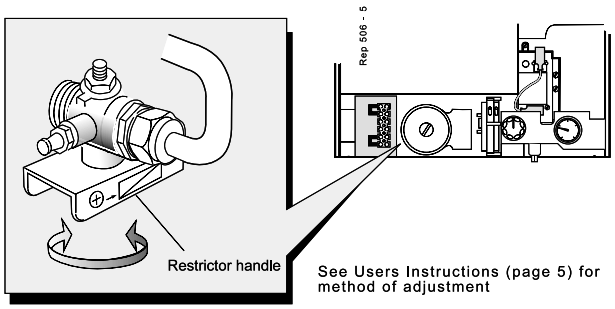

Model	Flow rate litres/min.		Time to fill a standard 2 gallon bucket
	35°C Temp rise	40°C Temp rise	
80	9.6	8.4	65 secs
100	12.0	10.5	52 secs
120	14.2	12.6	43 secs

2. **Central heating**
   Operate each control separately and check that the main burner or circulating pump, as the case may be, responds.
3. **Gas rate**
   Check the boiler gas rate when the boiler is at full DHW output. The gas rate will normally be between:

Response 80	43.1 to 47.7	**litres per minute**
	1.52 to 1.68	**cu/ft per minute**
Response 100	51.9 to 57.4	**litres per minute**
	1.8 to 2.0	**cu/ft per minute**
Response 120	64.8 to 71.6	**litres per minute**
	2.28 to 2.52	**cu/ft per minute**

checked at the gas meter, with no other appliance in use. These figures apply at the nominal UK mains voltage of 230V.

Note. *Long flue will reduce air flow, reducing the gas rate, slightly. If these rates are not obtainable consult the fault finding section.*

4. **Water circulation system**
   Note. *Fernox Superfloc flushing solution should be used during the flushing procedure.*
   - **a.** With the system HOT examine all water connections for soundness.
   - **b.** With the system still HOT, turn off the gas, water and electricity supplies to the boiler and drain down, to complete the flushing process.
   - **c.** Refill the system, adding inhibitor (see 'Water Treatment'), if required.
     Vent as necessary to clear all air and, again, check for water soundness. After venting, repressurise as required.
   - **d.** Balance the system.
     It is suggested that, initially, all radiator handwheel valves (or TRVs if fitted) be set fully open, that all lockshield valves be set a half-turn open and the bypass a half-turn to one turn open (a minimum of one turn open is recommended when TRVs are used.)
     Make minor adjustments to each radiator to achieve the same differential on all.
     Lastly, set the bypass to eliminate any boiler noise, without compromising radiator temperatures.
5. Finally, set the system controls to the user's requirements.
6. Remove the labels from the casing front panel.

If an optional programmer kit is fitted refer to the instructions supplied with the kit.

46 HANDING OVER

After completing the installation and commissioning of the system, the installer should hand over to the householder by the following actions:

1. Hand the User's Instructions to the householder and explain his or her responsibilities under current Gas Safety (Installation and Use) Regulations, or rules in force.
2. Draw attention to the Lighting Instruction label affixed to the inside of the lower front door.
3. Explain and demonstrate the lighting and shutting down procedures.
4. The operation of the boiler and the use and adjustment of ALL system controls should be fully explained to the householder, to ensure the greatest possible fuel economy consistent with household requirements of both heating and hot water consumption.
5. Advise the user of the precautions necessary to prevent damage to the system and to the building, in the event of the system remaining inoperative during frosty conditions.
6. If a programmer kit is fitted, draw attention to the Programmer Kit User's Instructions and hand them to the householder.
7. **After installation, commissioning and customer hand-over instructions please complete the benchmark appliance log book and leave this with the customer.**
8. Stress the importance of regular servicing by a CORGI registered installer and that a comprehensive service should be carried out AT LEAST ONCE A YEAR.
9. Demonstrate how to repressurise the boiler when the system pressure falls below 0.5 bar.
10. **Emphasise to the user** that the boiler may stop working if the system pressure is lowered by draining radiators to decorate behind them. In particular, explain to the user how the domestic hot water temperature varies with flow rate. This is especially important when water is drawn off while the boiler is already running for central heating (refer to 'CAUTION' in User's Instructions, page 2).

47 SERVICING SCHEDULE

To ensure the continued safe and efficient operation of the appliance it is recommended that it is checked at regular intervals and serviced as necessary. The frequency of servicing will depend upon the installation condition and usage but should be carried out at least annually. It is the law that any service work must be carried out by a registered CORGI installer.

1. Turn the heating controls to maximum so that the boiler lights and remains running. Check that no other gas appliances in the house are in use or likely to be used.
2. When the boiler has settled down check the gas rate at the meter (if the meter is of the pointer type you should time only complete revolutions of the pointer). Check the gas rate against the figures given in Table 1 for CH operation.
3. Fully open a hot water tap. The pump should stop as the boiler switches to HW mode. When the boiler has settled down check the gas rate, as in step 3, checking the measured rate against the figures given in Table 1 for HW operation.
4. Check the percentages of CO and CO_2 in the flue gases at the sampling point provided. Refer to Frame 48.

   Note. *If your meter reads CO in parts per million the figure must be divided by 10,000 to convert it to a percentage.*

   If the ratio of CO/CO_2 is less than 0.004 and the gas rates measured in steps 3 and 4 are close to nominal then no further action need be taken. If not, proceed to step 5.
5. Clean the main burner.
6. Clean the heat exchanger.
7. Check the main injector for blockage or damage.
8. Check that the flue terminal is unobstructed.

The servicing procedures are covered more fully in Frames 48 to 53 and MUST be carried out in sequence.

WARNING.

ALWAYS turn off the gas supply at the gas service cock, and switch off and disconnect the electricity supply to the appliance before servicing.

Switching the boiler on/off switch 'off' when a frost thermostat is wired directly from the mains may leave a live feed to the boiler.

ALWAYS test for gas soundness and carry out functional checks on reassembly.

IMPORTANT. When work is complete the boiler inner front sealing panel MUST be correctly refitted, making a good seal.

DO NOT OPERATE THE BOILER IF THE SEALING PANEL IS NOT FITTED.

48 BOILER SEALING PANEL REMOVAL

1. Turn off the gas supply at the gas service cock and disconnect the electricity supply.
2. Remove the screw and lift off the boiler front panel.
3. Remove the screws and pull out the tabs from the slots.

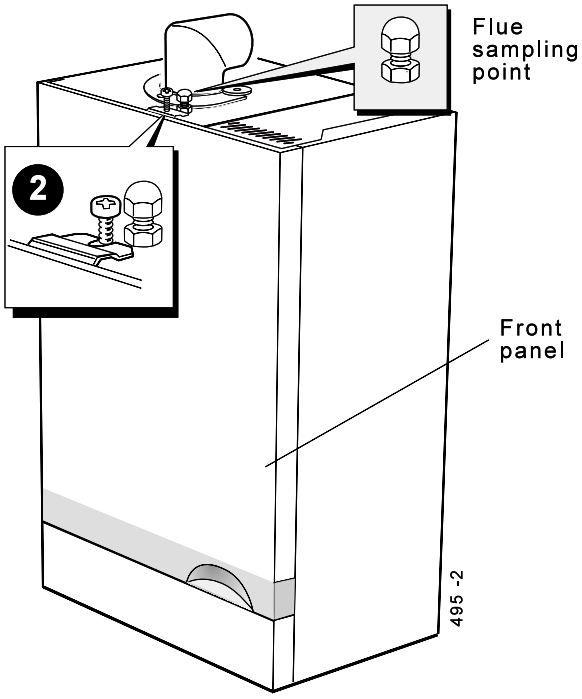

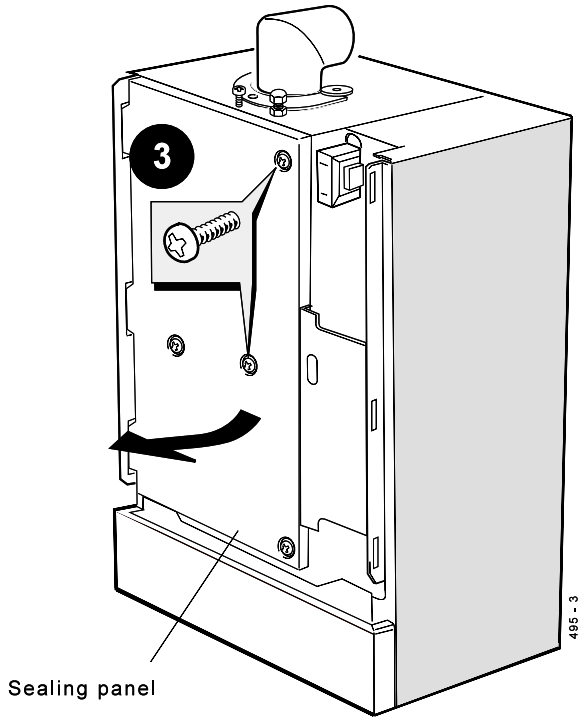

49 FAN REMOVAL AND CLEANING

1. Disconnect the pressure sensing pipe as follows:
   - **a.** Undo the single top fixing screw on the fan inlet venturi and slacken the other 2 location screws.
   - **b.** Undo the 2 screws securing the sensing pipe to the manifold block.
   - **c.** Slide the fan inlet venturi upward to disengage and remove the venturi and sensing pipe assembly.
2. Disengage the fan retention clip and rotate the fan body to the right, to disengage the bayonet fixing on the fan outlet.
3. Disconnect the electrical harness from the fan.
4. Withdraw the fan with the 'O' ring seal.
5. Check that the fan impeller runs freely. Clean with a soft brush or renew as necessary. Refer to Frame 65 for replacement.

Note. *Always take care when handling the fan, in order to preserve the balance of the impeller.*

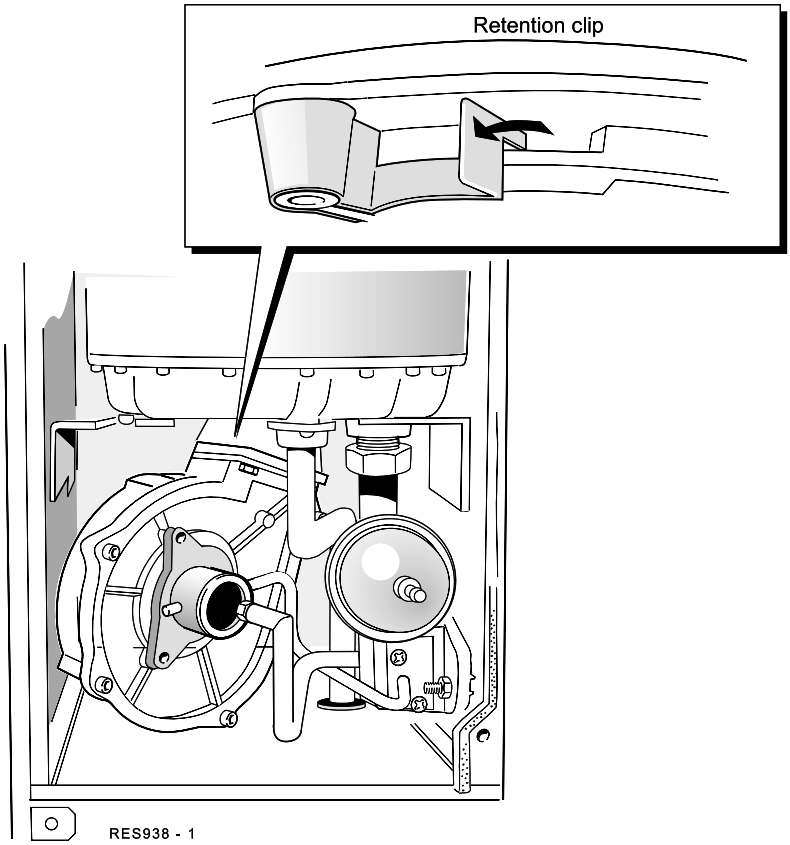

50 BURNER REMOVAL AND CLEANING

1. After removing the fan, as already described, disconnect the 2 ignition leads and one detection lead from the electrodes.
2. Undo the 3 fixing screws securing the burner assembly.
3. Withdraw the burner assembly downward and out of the heat exchanger.
4. Brush off any deposits that may have collected on the burner, ensuring that the flame ports are unobstructed.

   Note. *Brushes with metallic bristles MUST NOT be used.*
5. Inspect the spark and detection electrodes. Ensure they are clean and in good condition - replace if necessary.

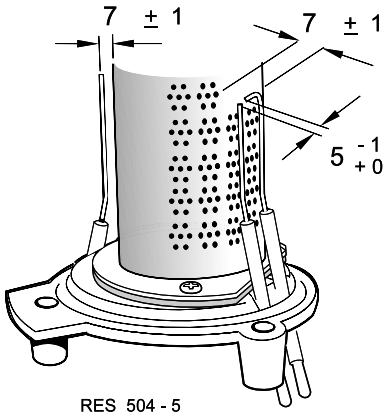

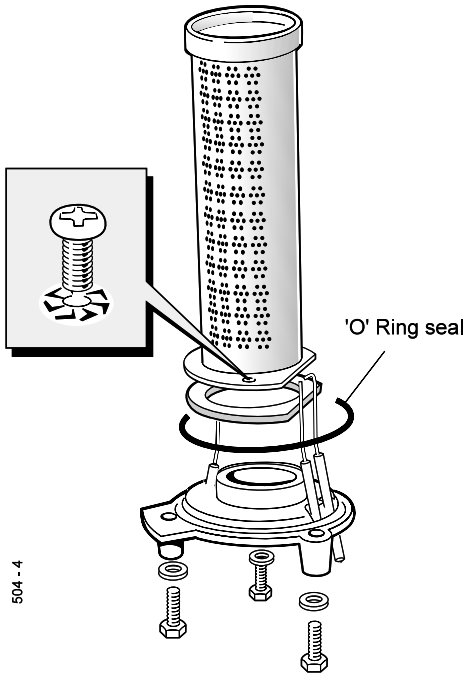

6. Check the spark and electrode gaps are correct.
7. Check that the spark and detection leads are in good condition and renew as necessary

51 CLEANING THE HEAT EXCHANGER

1. Place a plastic sheet or similar beneath the boiler and remove all visible loose deposits from the heat exchanger fins, using a suitable brush.

2. Take care to clean debris from the ledge inside the combustion chamber.

52 RE-ASSEMBLY

Re-assemble the boiler in the following order:

1. Refit the burner, renewing any damaged or deteriorating sealing gaskets.
2. Reconnect the 2 ignition leads and the detection lead.
3. Reconnect the fan electrical harness.
4. Ensure that the fan 'O' ring seal is in place then refit the fan, engaging it in the bayonet fixing and locating it in the retaining clip on the burner mounting plate.
5. Refit the fan venturi and sensing pipe assembly, tightening all 3 screws on the venturi and the 2 screws on the sensing pipe. (Ensure the 'O' ring seal is in place before clamping the sensing pipe to the manifold
6. Refit the boiler sealing panel.

   IMPORTANT. Ensure the boiler sealing panel is correctly fitted and that a good seal is made.
7. Refit the boiler front panel.
8. Turn on the gas supply at the gas service cock.
9. Reconnect the electrical supply.

53 BURNER PRESSURE CHECK

After any servicing, reference should be made to:

- Tables 2 and 3, page 3 (or the data plate), which quote details of the burner pressures for the boiler models.
- Frame 45 'Gas rate.'

Note that the pressure is set by the gas valve according to fan speed, which in turn is controlled by reference to boiler temperature and mode (CH/HW) thus the burner pressure should be checked at maximum demand for CH or HW as appropriate.

Frame 82 deals with possible causes of incorrect burner pressure.

REPLACEMENT OF COMPONENTS

54 GENERAL

WHEN REPLACING ANY COMPONENT:

1. Isolate the electricity supply at the switched spur.

   Note. T*urning the boiler on/off switch does not isolate the permanent live supply to the boiler.*
2. Turn off the gas supply.

Note. *In order to assist fault finding, the printed circuit boards are fitted with indicator lights . Full details are found in the Fault-Finding section.*

IMPORTANT. When work is complete the sealing panel must be correctly fitted, ensuring that a good seal is made.

THE BOILER MUST NOT BE OPERATED IF THE SEALING PANEL IS NOT FITTED.

55 CH AND HW TEMPERATURE SENSOR REPLACEMENT

(Spares for both are identical)

1. Disconnect the electrical supply.
2. Remove the boiler front and sealing panels. Refer to Frame 48.
3. Remove the fan (refer to Frame 49) : the CH and HW thermistors are now exposed.
4. Close off the isolating cock(s) at the bottom of the boiler, for CH or HW, as appropriate.
5. Release system pressure by opening the appropriate drain cock(s). *Do NOT release CH pressure using the pressure relief valve - it may cause debris within the system to foul the valve.*
6. Disconnect the plug-in lead from the temperature sensor and unscrew the sensor to release it.
7. Screw in the new sensor, using thread sealant, reconnect and re-assemble in reverse order.
8. Open cock(s) and refill / repressurise pipework.
9. Test fire the boiler.
10. Disconnect the filling loop (if used).

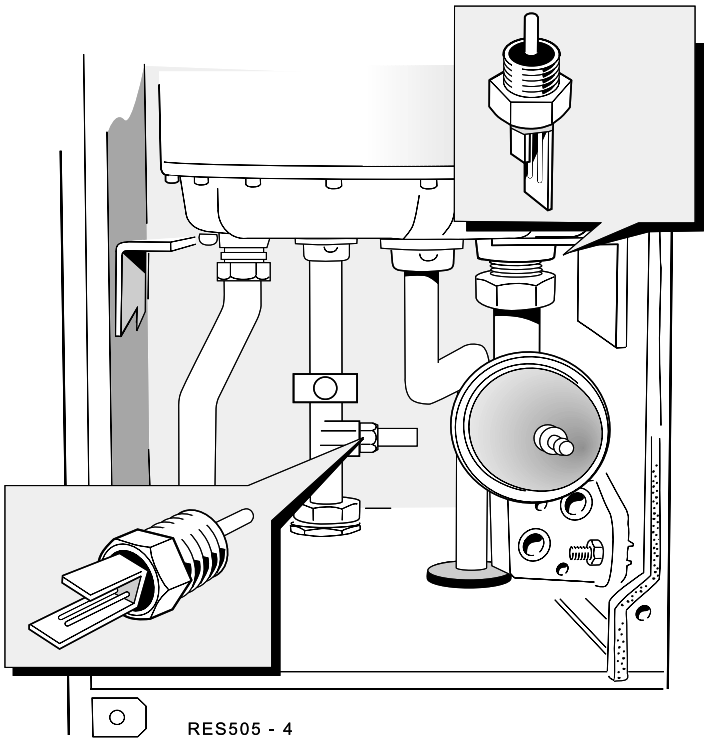

56 HW LIMIT THERMOSTAT REPLACEMENT

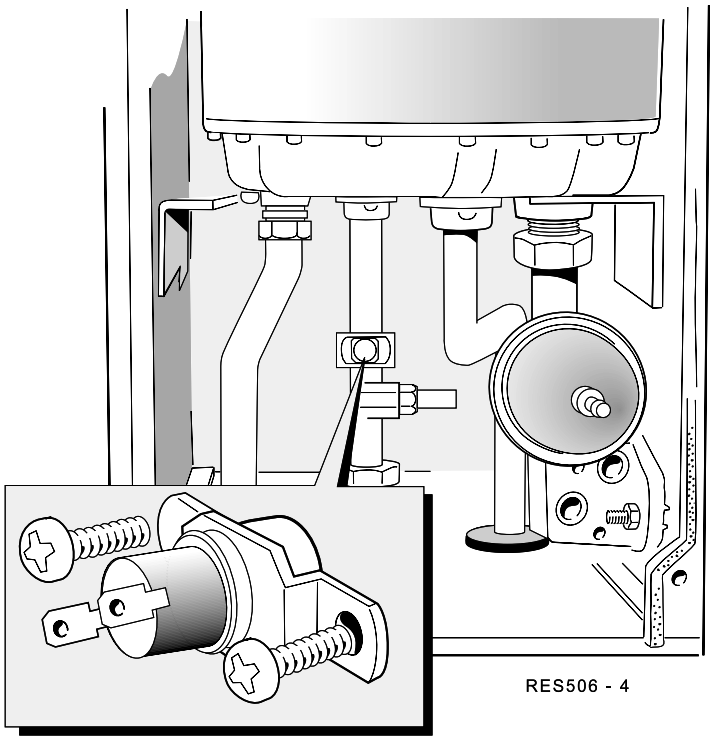

1. Disconnect the electrical supply.
2. Remove the boiler front panel. Refer to Frame 48.
3. Remove the fan (refer to Frame 49) : the HW limit thermostat can now be seen, attached to the HW pipework by two 3.5mm screws.
4. Disconnect the leads from the thermostat.
5. Release the 2 securing screws and remove the old thermostat.
6. Fit the new thermostat, reconnect and re-assemble in reverse order.
7. Reconnect the supply and test fire the boiler.

57 OVERHEAT THERMOSTAT REPLACEMENT

1. Disconnect the electrical supply to the boiler. Remove the electrical connector (secured by one screw) from the boiler base.
2. Remove the controls panel. Swing the panel upside down and fix with the long screws. Remove the bottom panel.
3. Release the screws securing the pressure gauge subpanel and allow the panel to move to one side.
4. Disconnect the leads from the overheat 'stat. Undo the clamping nut to release the 'stat head.
5. Undo the screw and clamp securing the pancake sensing end of the thermostat to the pipe
6. Replace with new thermostat. Re-assemble and rewire in reverse order (electrical polarity is immaterial).

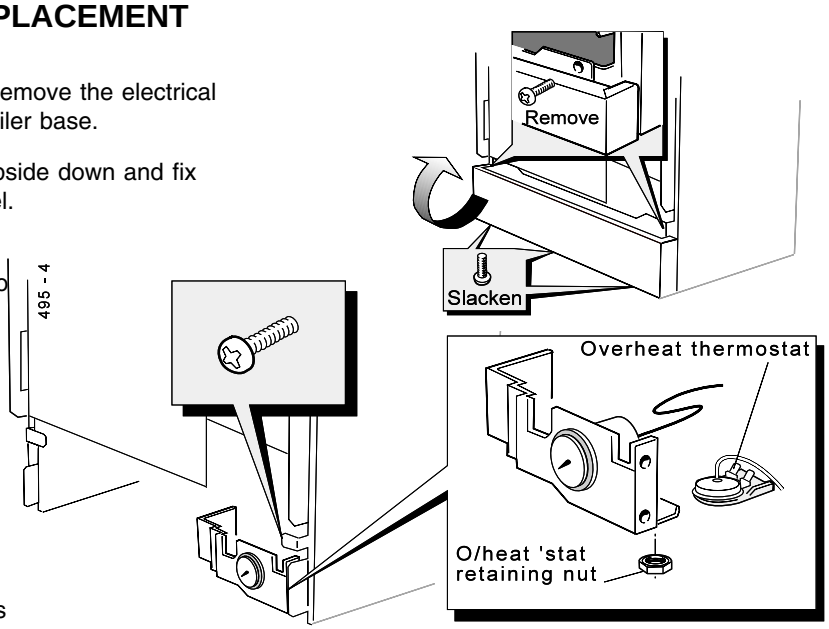

58 SPARK AND DETECTION ELECTRODE REPLACEMENT

1. Remove front and sealing panels. Refer to Frame 48.
2. Remove the fan assembly. Refer to Frame 49.
3. Remove the burner assembly. Refer to Frame 50.
4. Undo the electrode securing bracket screws, as required.
5. Fit new electrodes as necessary, ensuring that the gaskets are in good condition and sealing correctly - renew as necessary.
6. Check the spark / detection gaps. Refer to Frame 50.
7. Re-assemble in reverse order.
8. Check the ignition and operation of the burner.

Note. *The spark electrodes are replaced as a pair; the detection electrode is a single probe.*

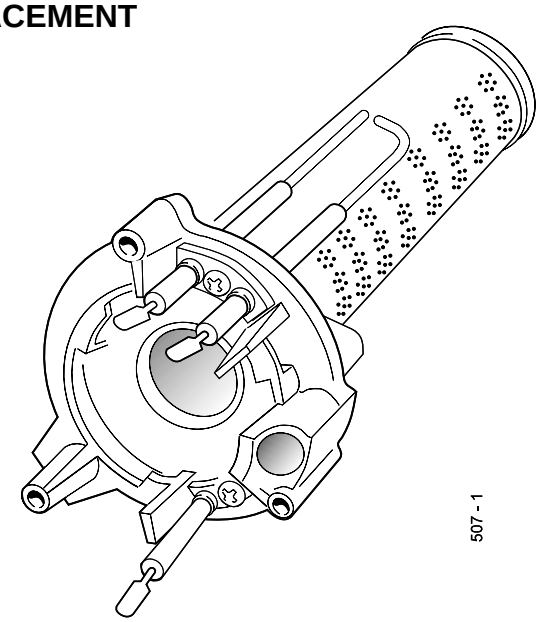

59 SPARK GENERATOR REPLACEMENT

1. Remove the front and sealing panels. Refer to Frame 48.
2. Remove the PCB cover.
3. Undo the securing screw and lift off the spark generator cover (if fitted).
4. Disconnect the electrical leads from the spark generator.
5. Withdraw the spark generator.
6. Fit the new spark generator and re-assemble in reverse order.
7. Check the operation of the boiler.

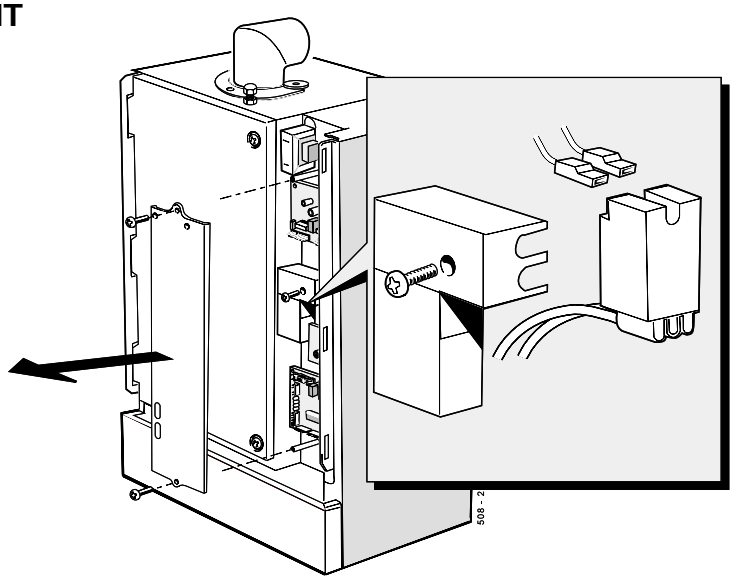

60 BURNER REPLACEMENT

1. Remove front and sealing panels. Refer to Frame 48.
2. Remove the fan assembly. Refer to Frame 49.
3. Disconnect the 2 ignition leads and one detection lead from the electrodes.
4. Undo the 3 fixing screws securing the burner assembly.
5. Withdraw the burner assembly downward and out of the heat exchanger, taking care not to damage the electrodes.
6. Remove the spark and detection electrodes. Refer to Frame 58.
7. Remove the 3 securing screws and withdraw the burner from the mounting flange.
8. Fit the new burner, replacing any damaged or deteriorating gasket.
9. Re-assemble in reverse order.

Note. *Check the spark and detection gaps.*

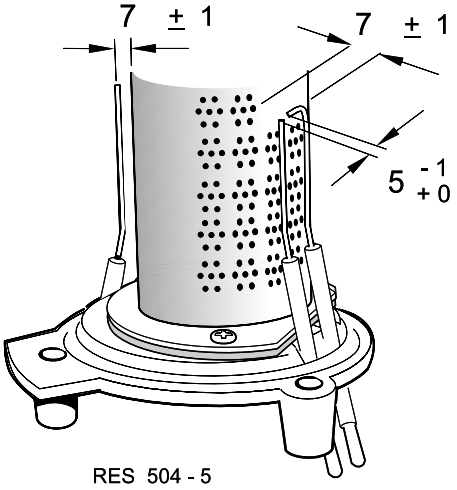

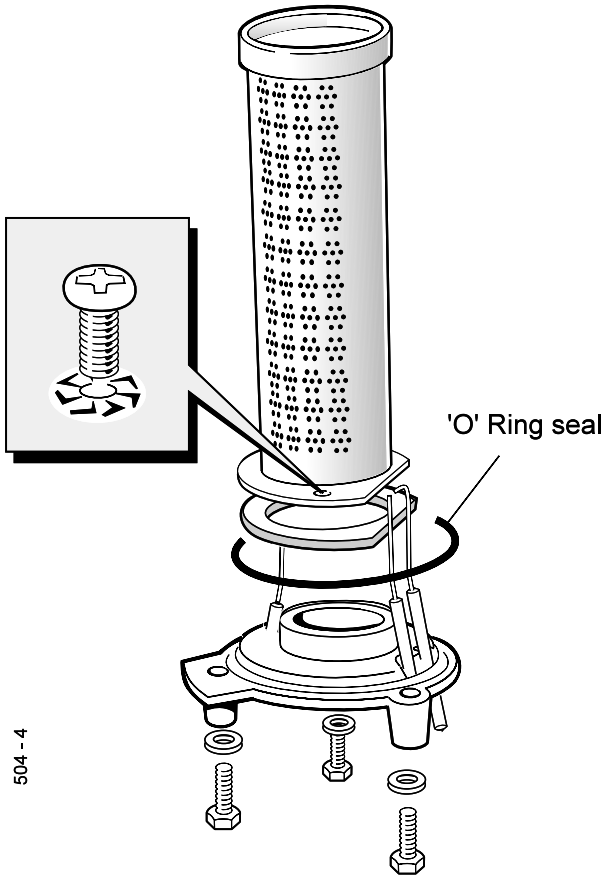

61 BURNER INJECTOR REPLACEMENT

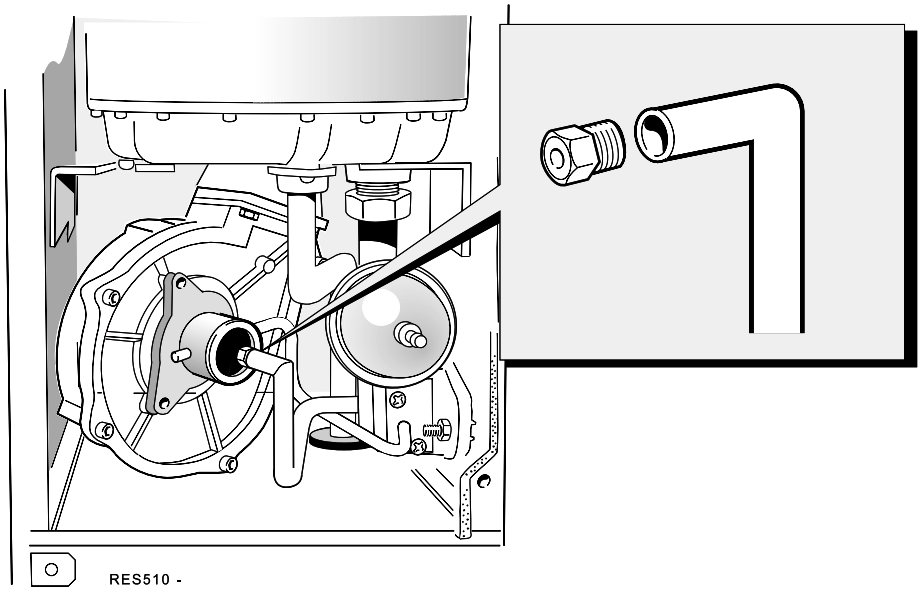

1. Refer to Frame 48.
2. Unscrew the injector from the gas injection pipe.
3. Check that the new injector is of the correct size then screw in place.
4. Re-assemble in reverse order.

62 GAS CONTROL VALVE AND SOLENOID REPLACEMENT

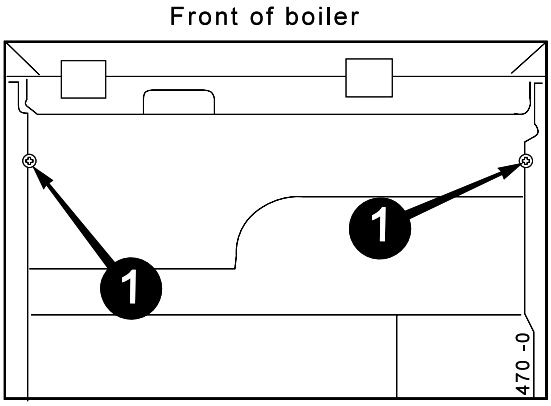

View of underside of boiler

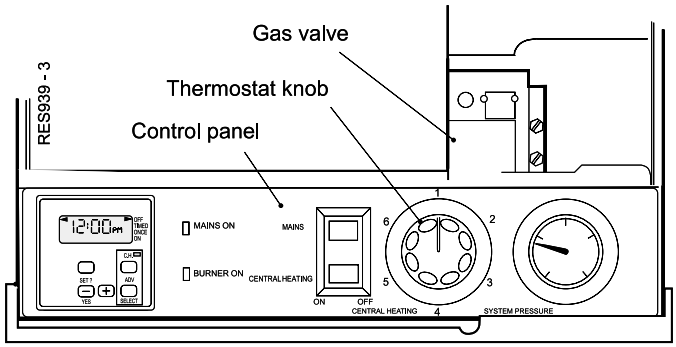

To replace the gas valve COMPLETE

Refer to Frame 54.

1. Remove the front and sealing panels. Refer to Frame 48.
2. Remove the casing bottom panel.
3. Remove the control panel. Disconnect the electrical leads (noting their position for refitting) and place panel safely to one side.
4. Remove the fan unit. Refer to Frame 49.
5. Remove the 2 securing screws from the pressure gauge sub panel
6. Gently ease the pressure switch housing out of the pressure switch sensing hose.
7. Unplug the electrical leads from the gas valve.
8. Undo the gas cock union connection.
9. Undo the 2 extended nuts retaining the gas injection pipe and withdraw the pipe, taking care not to lose the 'O' ring seal. Undo the third nut and the gas outlet manifold block.

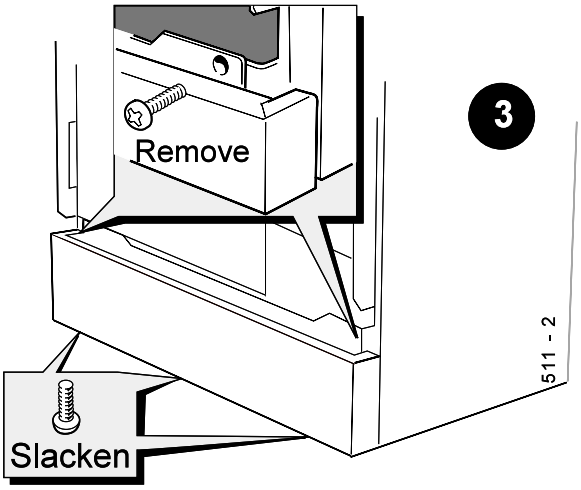

To replace ONLY the SOLENOIDS

a. Follow steps 3, 6 and 7.

b. Undo the 2 retaining screws on the solenoids then pull the solenoid to release.

c. Re-assemble in reverse order. Ensure step 13 (Frame 63) is followed.

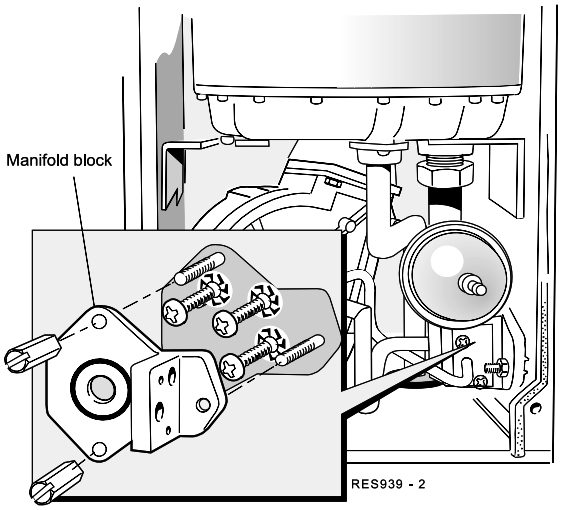

63 GAS CONTROL VALVE REPLACEMENT - continued

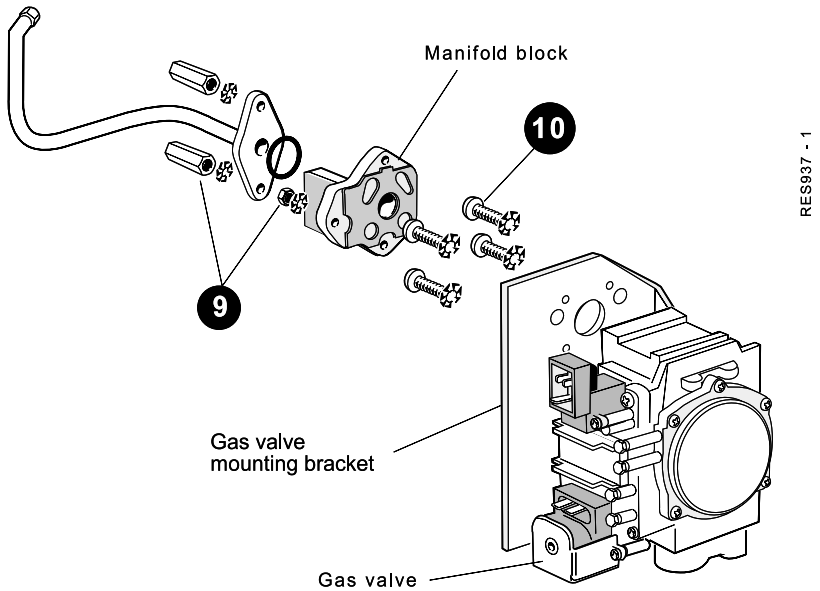

10. Supporting the valve, undo the 4 retaining screws and withdraw the gas valve, leaving the plate with the 3 studs in place.

11. Transfer the gas cock union and elbow assembly to the new gas valve, reusing the four M5 x 10 screws, together with the new 'O' ring seal provided.

12. Fit the new gas valve in reverse order, ensuring that the gas valve gasket, manifold gasket and injector pipe 'O' ring are all undamaged

13. Operate the boiler for 10 minutes at full DHW rate and check the burner pressure / gas rate against the value shown on the data plate or in Table 3.

64 WATER PRESSURE GAUGE

1. Disconnect the electrical supply to the boiler.

2. Remove the bottom panel.

3. Remove the controls panel.

4. Close the isolating valves on the CH flow/return at the base of the boiler then release CH system pressure by opening one of the CH drain cocks on the isolating valves.
It is not advisable to release system pressure using the safety valve.

5. Unscrew the nut securing the capillary at the CH flow pipe boss and withdraw.

6. Squeeze the tabs to release the pressure gauge.

7. Fit the replacement gauge and reassemble in reverse order.

8. Close all drain cocks and open both isolating valves.

9. Fit the filling loop. Fill the boiler with water and pressure to 1 bar (as appropriate). Reconnect services.

10. After satisfactory test firing and removal of air from the system remove the filling loop.

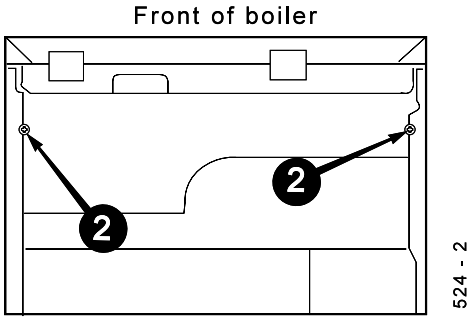

View of underside of boiler

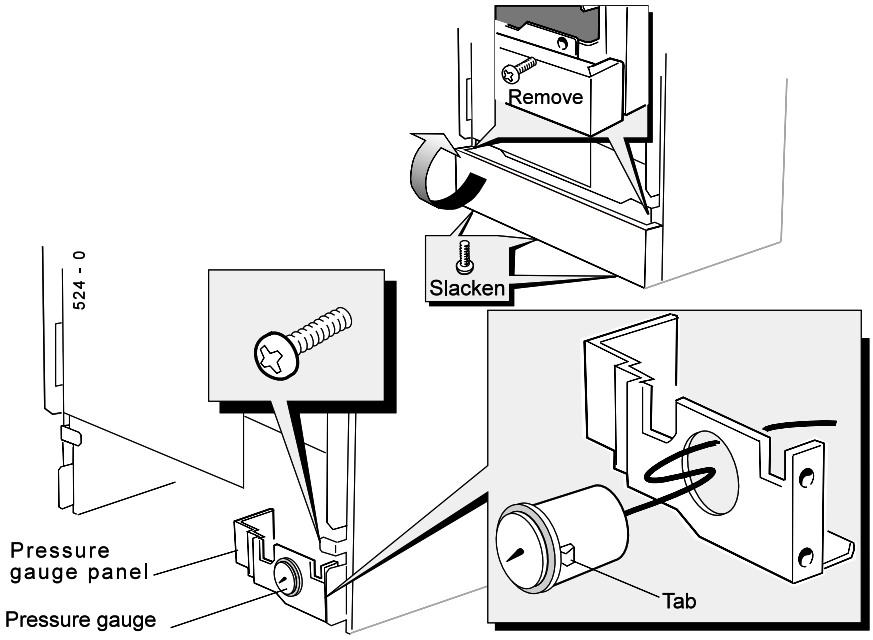

65 FAN UNIT REPLACEMENT

1. Remove the front and sealing panels. Refer to Frame 48.
2. **a.** Undo the single fixing screw on the fan inlet venturi and slacken the other 2 location screws.
   b. Undo the 2 screws securing the sensing pipe to the manifold block.
   c. Slide the fan inlet venturi upward to disengage and remove the venturi and sensing pipe assembly.
3. Disengage the fan retention clip and rotate the fan body to the right to disengage the bayonet fixing on the fan outlet.
4. Disconnect the electrical leads from the fan.
5. Withdraw the fan.
   Note. *Always take care when handling the fan in order to preserve the balance of the impeller.*
6. Fit the new fan, ensuring that:
   a. All seals are correctly refitted.
   b. The sensing pipe is correctly refitted.
   c. The fan is fully engaged.
7. Check the operation of the new fan.

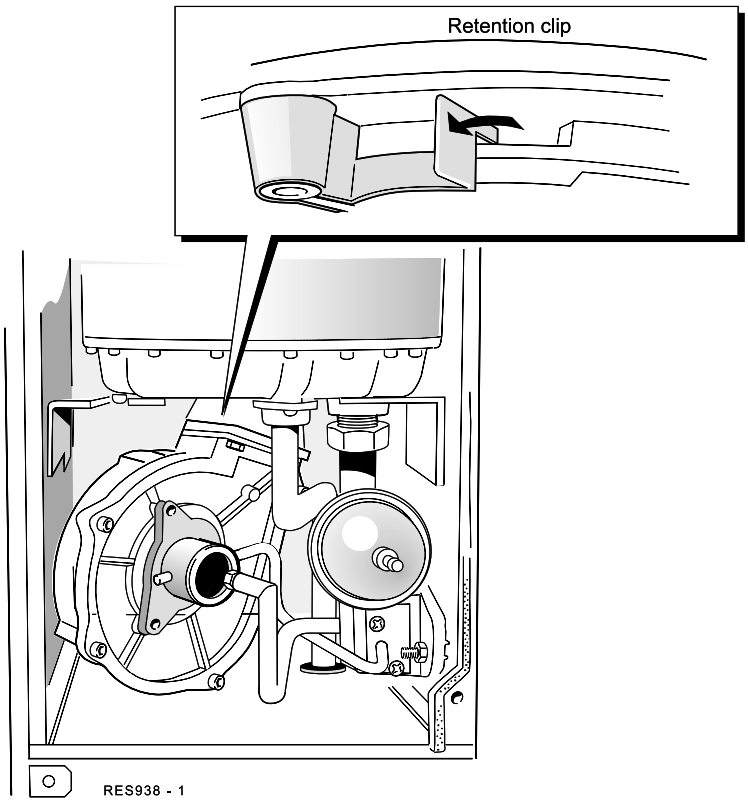

65A FLOW RESTRICTOR CLEANING / REPLACEMENT (where fitted)

The restrictor is a plastic piece fitted between the lower and upper cold pipe assemblies.

To access the flow restrictor proceed as follows:

1. Close the cold water inlet valve below the boiler.
2. Open a hot water tap to relieve the pressure in the expansion vessel and pipework.

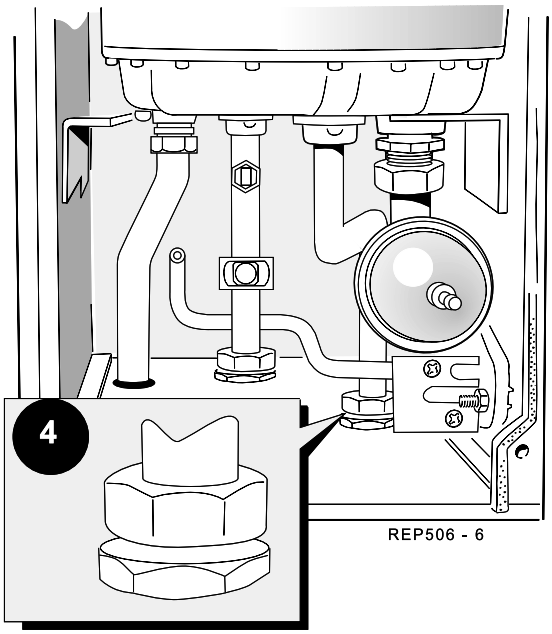

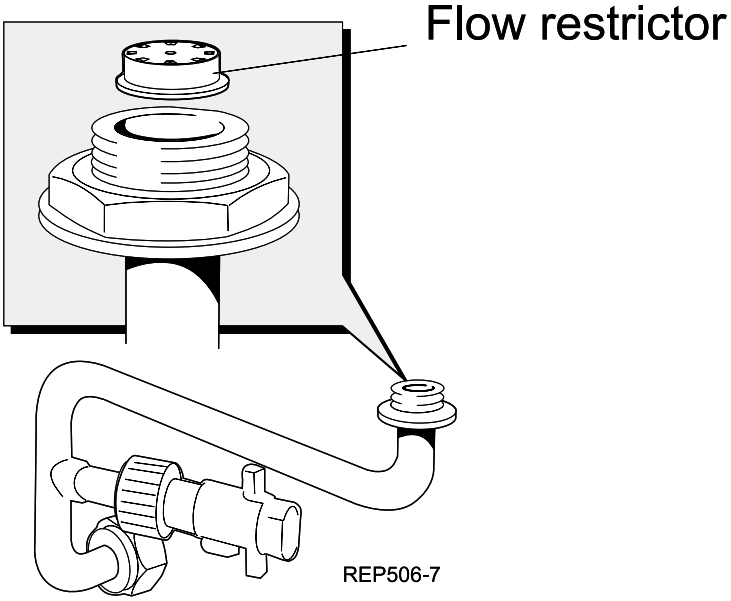

3. Drain using the valve nipple.
4. Undo the bulk head fitting shown.
5. Slacken the nut on the other end of the lower cold pipe assembly.
6. Clean or renew as necessary. Re-assemble in reverse order.

66 PRINTED CIRCUIT BOARD REPLACEMENT

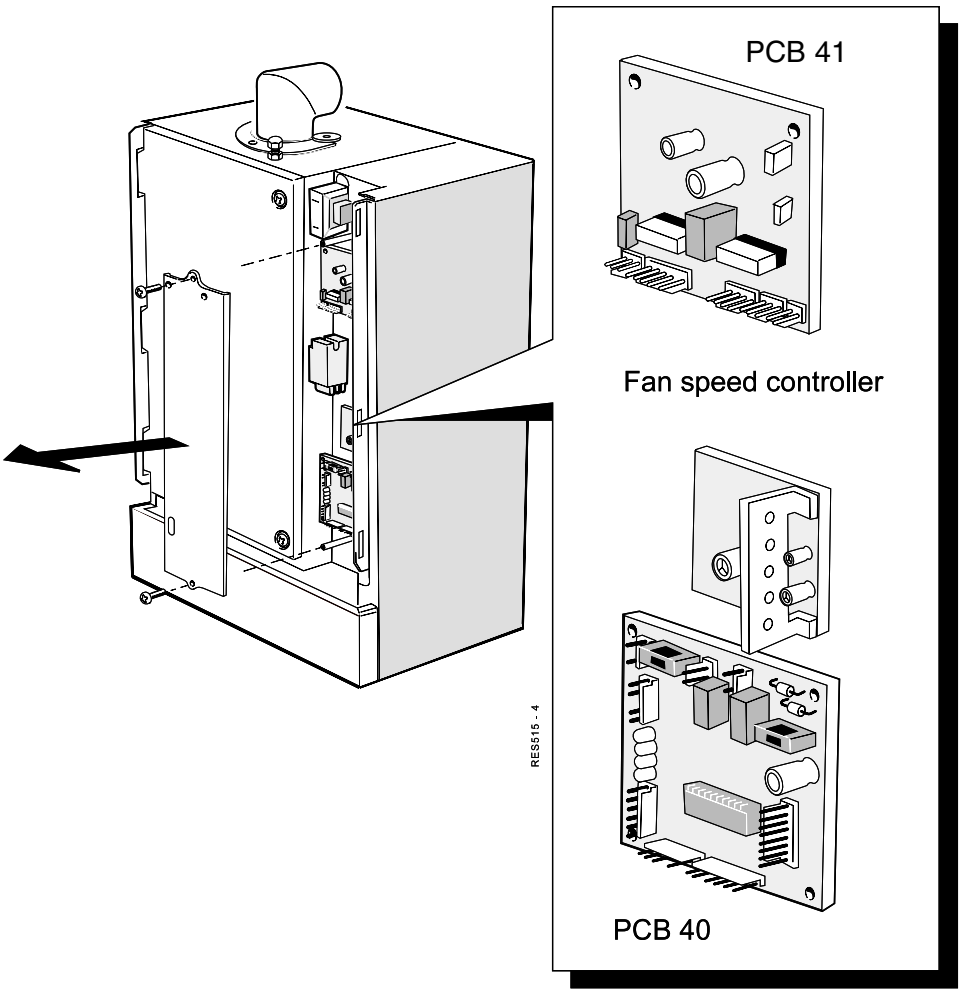

The Response uses:

PCB 41 - Ignition sequence

PCB 40 - Logic sequence
Fan speed control

1. Isolate the electrical supply. Refer to Frame 54.
2. Remove the front panel.
3. Remove the PCB cover
4. Disconnect all 'Molex' plugs feeding the PCB to be changed.
5. Release the clips and remove the PCB.
6. Fit the new board onto the clips.
7. Replace all 'Molex' connectors. Note that the connectors are made non-interchangeable. If in doubt, refer to Frame 40 - Pictorial Wiring.
8. Reassemble in reverse order
9. Test both DHW and CH modes of operation.

67 HW EXPANSION VESSEL

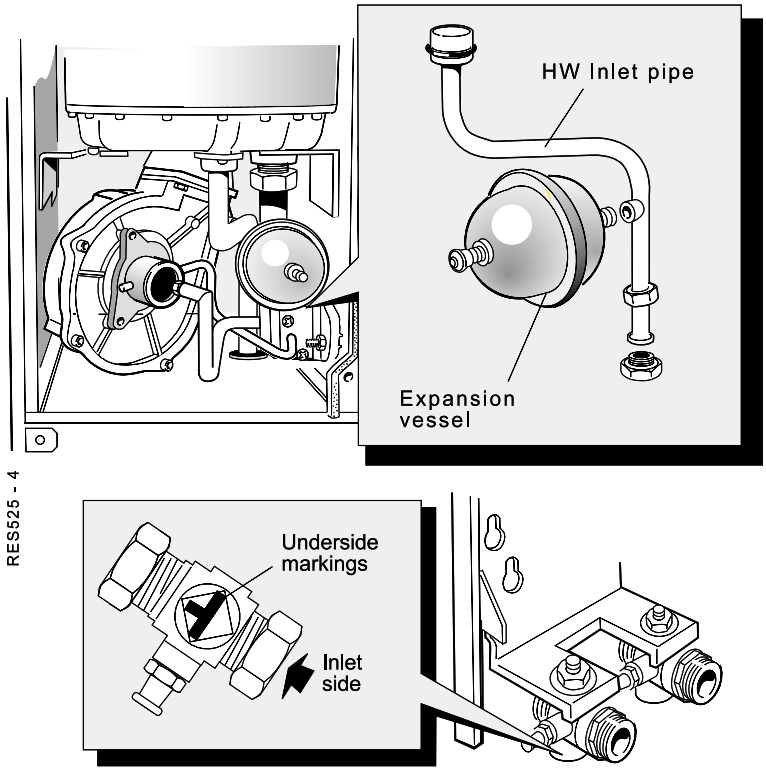

1. Disconnect the electrical supply to the boiler.
2. Remove the front and sealing panels. Refer to Frame 48.
3. Close the isolating valve on the HW supply then release pressure by opening a hot tap. **Note.** *Ensure valve markings are as shown.*
4. Drain, using the drain point on the isolating valve.
5. Unscrew the HW expansion vessel, which may be finger-tight. If necessary, remove the fan (see Frame 65). To access use a spanner on the hexagon nut behind the vessel.
6. Replace with new sealing gasket and vessel. Reassemble in reverse order and test fire.

68 PUMP REPLACEMENT

Note. *The Grundfos 15/60 pump is available in several versions, according to the position of the electrical connector in relation to the pipework. Check that you have the correct version - see step 9.*

1. Isolate the electrical supply. Refer to Frame 54.
2. Remove the boiler bottom panel.

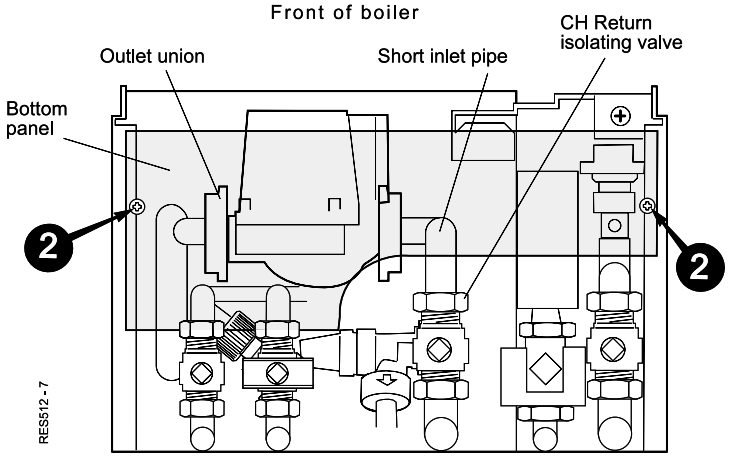

View of underside of boiler

3. Remove the controls panel.
   If a programmer is fitted it is necessary to disconnect the programmer harness at the terminal block.
4. Close the valves on the CH flow and return pipework below the boiler.
5. Drain down (refer to Frame 68) by opening the CH drain cock. Do not release system pressure using the pressure relief valve as it may cause debris within the system to foul the valve.
6. Loosen the pump outlet union and the inlet connection at the rear of the CH return isolating valve.
7. Unplug the inline electrical connector.
8. Disconnect the pipework fully and remove the old pump, together with the short inlet pipe.
9. Ensure that the replacement pump has the motor positioned so that the *electrical connections are on the same side as the inlet pipe.* If necessary, use an Allen key to remove the motor and reposition it.
10. Transfer the short inlet pipe to the *inlet* side of the replacement pump, using a new sealing washer.
11. Make the electrical connections.
12. Offer the pump / pipe assembly to the boiler, using the second new washer on the pump outlet union. Tighten the water connections.
13. Close the drain cock and open the system isolating valves. Fit the filling loop - fill, vent and pressurise to 1 bar (or as required).
14. Restore services and operate the heating controls to test-fire the boiler.
15. Vent air and top up the pressure again, if required.
16. Remove the filling loop.

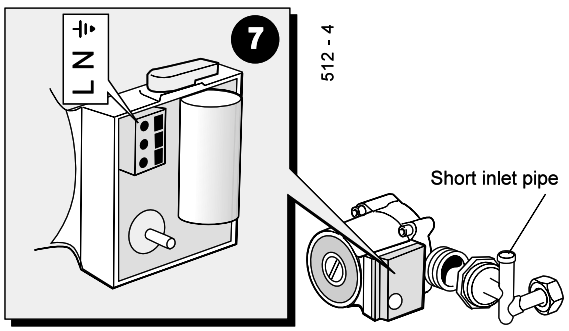

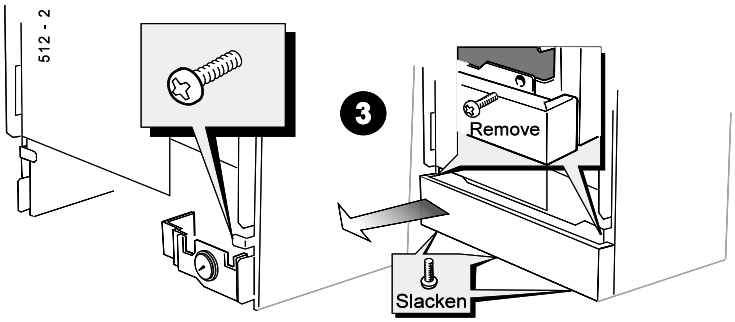

69 HEAT EXCHANGER REPLACEMENT

WARNING. This will necessitate disconnection of all services, including the flue turret.

Refer also to Frame 7 - 'Boiler Exploded View'.

Note. *If the installation allows the boiler to be removed from the pre-piping frame the replacement will be more easily conducted if this is done. If this is possible remove the boiler after step 6.*

1. Isolate the electrical and gas supply to the boiler.
2. Isolate the water and gas supplies by closing 3 cocks below the boiler.

Note. *Do not close the DHW restrictor ball valve.*

3. Remove the boiler front panel and inner sealing panel. Refer to Frame 48.

View of underside of boiler

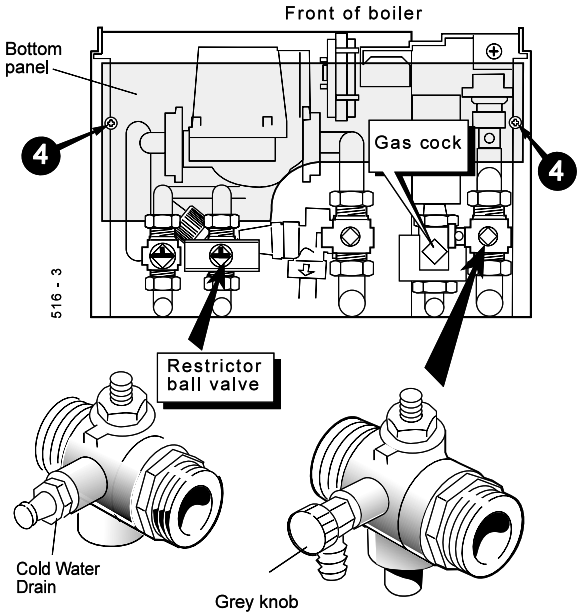

70 HEAT EXCHANGER REPLACEMENT - continued

4. Remove the bottom panel.
5. Attach drain pipes to the 2 boiler drain points. Open the CH drain by turning the grey knobs and the HW drain by slackening the drain point. Note the marking on the bottom of the valves. Refer to Frame 68.
6. While the boiler is draining, release the turret clamp on top of the boiler, together with the screw securing the turret to the flue pipe. Remove the turret.
7. Remove the fan, venturi and sensing pipe. Refer to Frame 49.
8. Unscrew and remove the HW expansion vessel.
9. Undo the 2 extended nuts securing the gas injection pipe and remove.
10. Disconnect the spark electrode leads and the flame sensing electrode lead at the burner base. Refer to Frame 58.
11. Remove the 3 screws securing the burner assembly and withdraw the assembly downward, taking care not to damage the electrodes. Refer to Frame 60.
12. Unplug the electrical leads from both CH and HW temperature sensors and HW overheat thermostat.
13. Unscrew the nut securing the bottom of the HW inlet pipe together with the hexagon socket screw retaining the upper end. Rotate the pipe to clear the bulkhead connector and then pull down to remove.
14. Unscrew the nut on the CH flow and return pipes to the heat exchanger.
15. Unscrew the nut securing the bottom of the HW outlet pipe together with the hexagon socket screw retaining the upper end.
16. Unscrew the locknut on the bulkhead fitting for the HW outlet pipe.
17. Unscrew the compression nut securing the HW outlet pipe to the pre-piping frame.
18. Pull down the HW outlet pipe to remove.
19. Unscrew and remove the automatic air vent from the top of the heat exchanger.
20. Remove the 2 screws securing the heat exchanger to the support brackets, together with the top clamping screw.

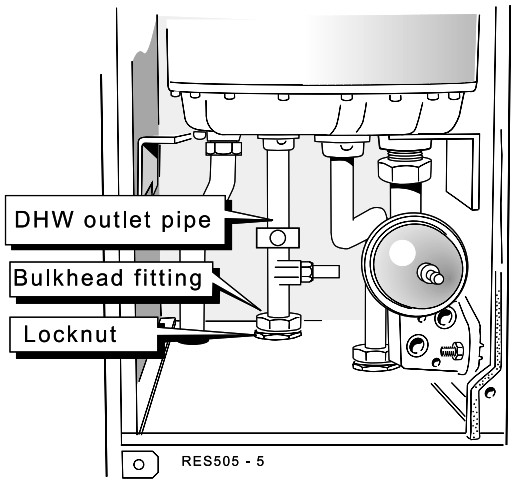

21. Remove the 2 nuts securing the left support bracket to the chamber side and remove the left support bracket.
22. Supporting the weight of the heat exchanger, slacken the screw on the right support bracket and allow the bracket to its lowest position.
23. Lift out the heat exchanger.
24. Re-assemble in reverse order, using new gaskets as appropriate.
25. Before refitting the fan, ensure the wires have been reconnected to the:
    - CH thermistor (*violet pair*)
    - HW thermistor (*grey*)
    - Flame detection electrode (*yellow*)
26. When re-assembly is complete, fit the filling loop, close all drain points, open all isolating valves and ensure that the boiler is filled, vented of air and pressurised before attempting to fire it.
27. After a satisfactory test firing, remove the filling loop (this is a requirement of the water bylaws).

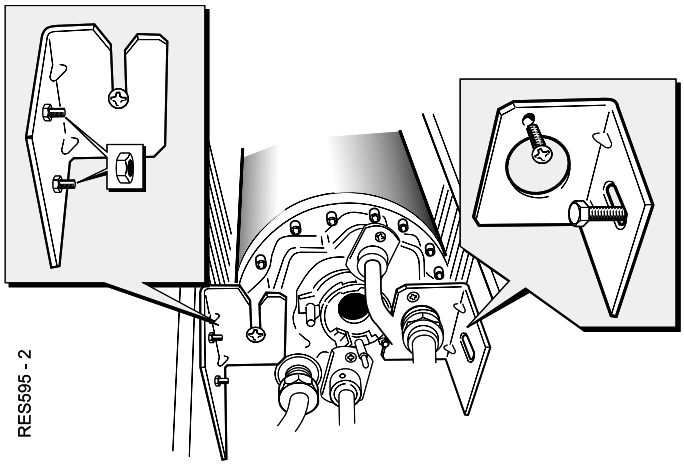

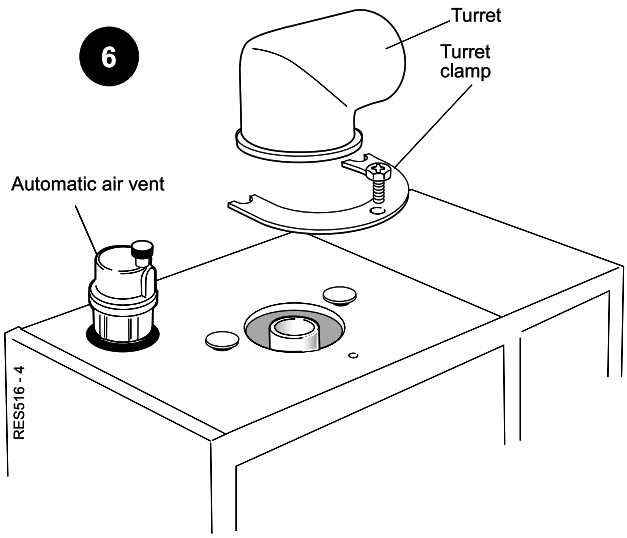

71 BOILER SEALING PANEL SEAL

1. Refer to Frame 48.
2. Remove the screws and disengage panel.
3. Remove the old seals and thoroughly clean the casing surfaces.
4. Fit the new self adhesive seals, 3 to the panel and 1 the casing .
5. Re-assemble in reverse order.

Note.
Ensure that the boiler sealing panel is correctly seated, compressing the sealing strip to make an airtight joint.

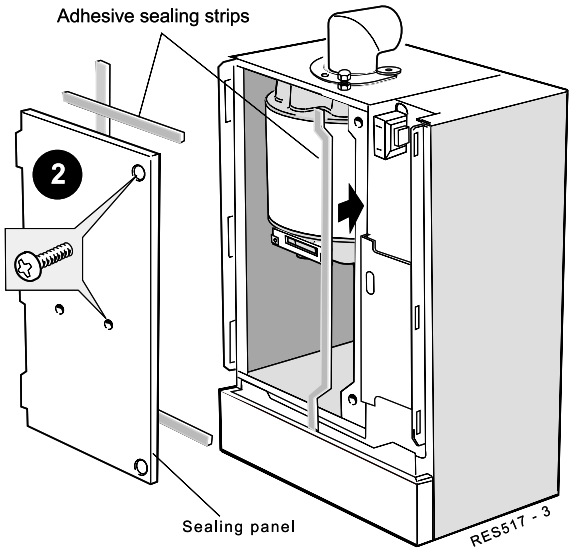

72 WATER PRESSURE SWITCH

1. Disconnect the electricity supply. Refer to Frame 54.
2. Close the CH flow and return isolating valves at the bottom of the boiler. Use the drain points on these valves to release system pressure and drain down. (It is not advisable to release system pressure using the safety valve manual knob as this can cause debris to lodge in the valve).
3. Remove the controls panel. If programmer is fitted, it is necessary to disconnect the programmer harness at the terminal block.
4. Remove the pressure gauge sub panel.
5. Remove the wires from the switch.
6. Unscrew the compression fitting and remove the pressure switch.
7. Reassemble in reverse order.

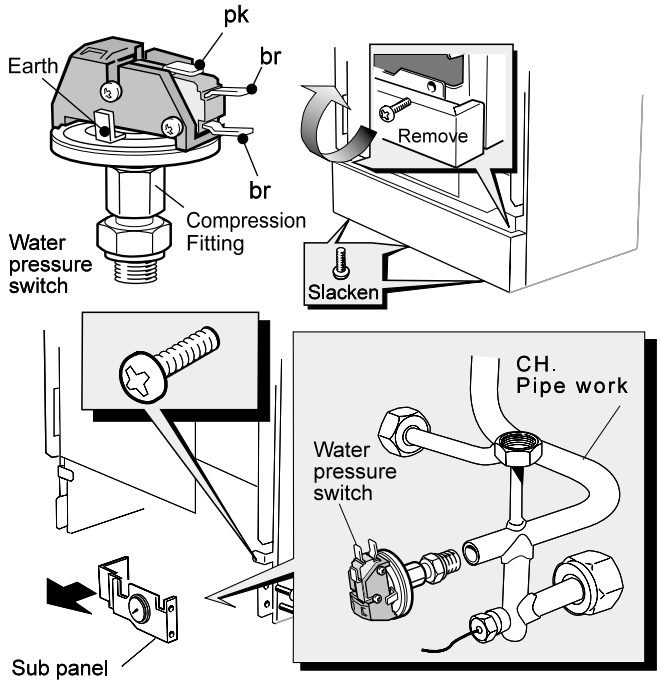

73 PROGRAMMER REPLACEMENT (if fitted)

1. Refer to Frame 54.

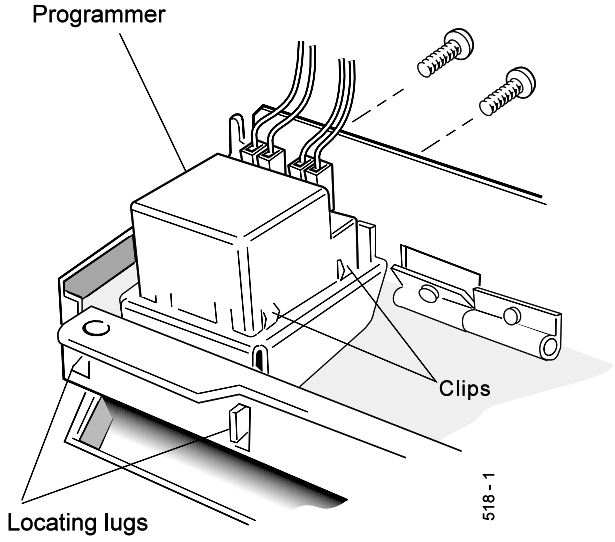

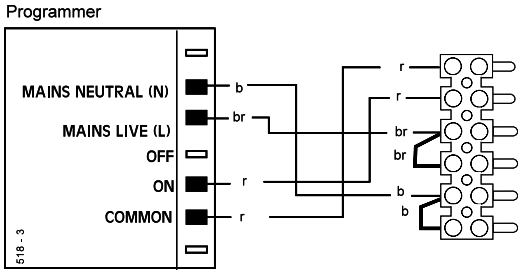

2. Remove the casing front panel. Refer to Frame 48.
3. Disconnect the programmer terminal block.
4. Remove the control panel. Refer to Frame 65.
5. Undo the 2 retaining screws and withdraw the programmer, complete with mounting bracket, from the control panel.
6. Compress the clips on the sides of the programmer and withdraw it from the retaining bracket.
7. Fit the new programmer and re-assemble in reverse order.
8. Check the operation of the new programmer.

74 WATER FLOW SWITCH REPLACEMENT

1. Isolate the electrical supply. Refer to Frame 54.
2. Remove the boiler bottom panel .
3. Remove the controls panel. If a programmer is fitted it is necessary to disconnect the programmer harness at the terminal block.
4. Close the cock on the HW inlet pipe below the boiler.
5. Drain down. Refer to Frame 68.
6. Disconnect the flow switch electrical lead at the in line connector.
7. Undo the knurled fixing nut and withdraw the flow switch.
8. Fit the new flow switch, ensuring that the locating pin and hole are correctly positioned.

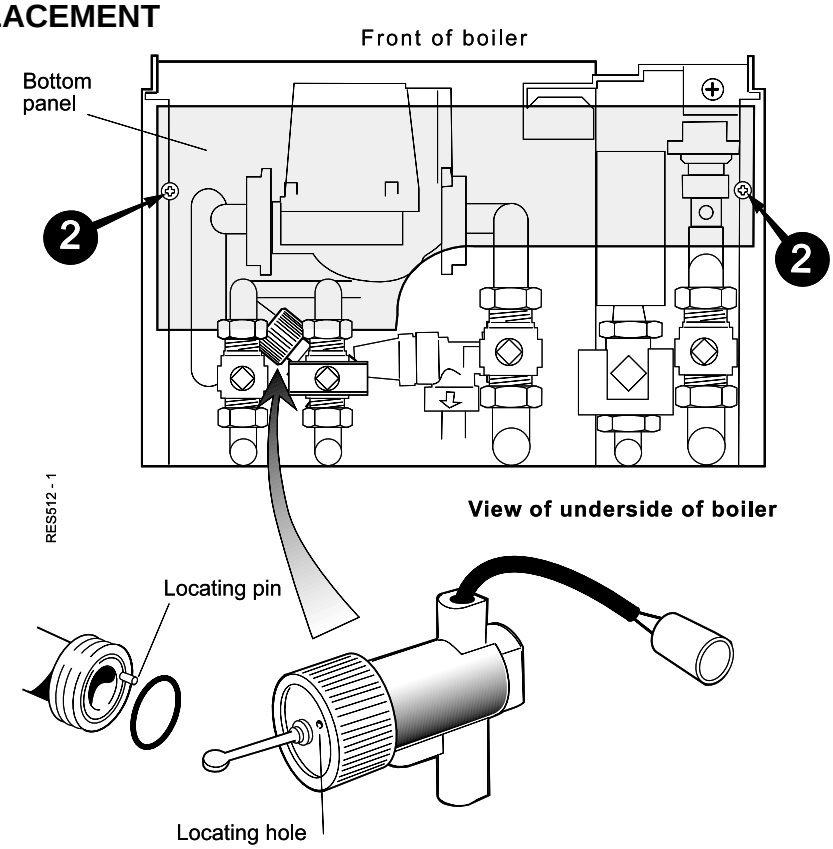

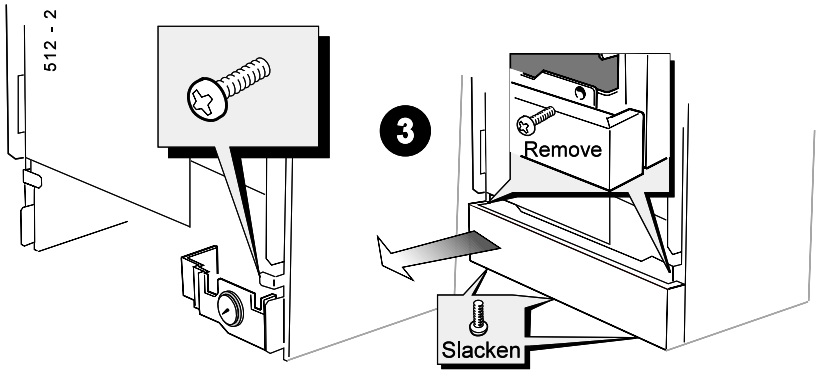

9. Complete the reassembly in reverse order.
10. Open the isolating valve and bleed air out at the tap(s).
11. Reconnect the electrical supply and open a HW tap to test operation of the boiler.

75 INLET FILTER CLEANING

The filter comprises a gauze disc in a synthetic rubber carrier ring. It is secured at the front (outlet) of the cold water isolating valve by means of the union connection between the valve and the boiler inlet pipework. to access the filter, proceed as follows:

1. Close the cold water inlet valve below the boiler. Ensure the markings are as shown.
2. Open a hot tap to relieve the pressure in the expansion vessel and pipework.
3. Drain, using a valve nipple.
4. Undo the union connection referred to above, and remove the filter disc.
5. Clean or renew the filter disc. Reassemble in reverse order.

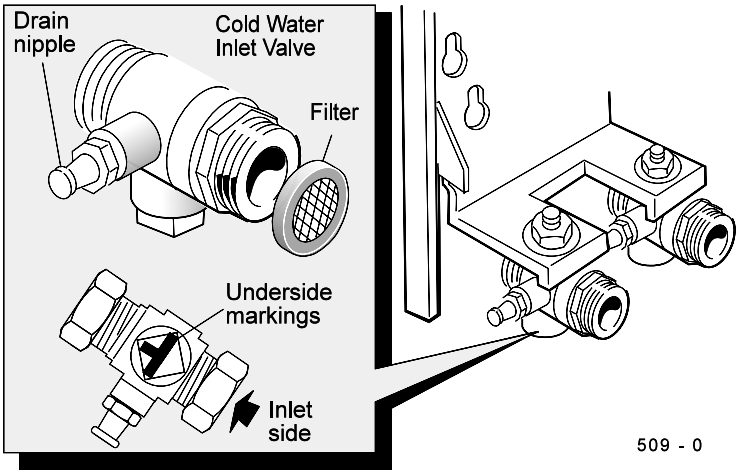

76 MAINS TRANSFORMER REPLACEMENT

1. Isolate the electrical supply to the boiler. Refer to Frame 54.
2. Remove the boiler front panel. Refer to Frame 48.
3. Release the screws securing the PCB cover and remove the cover.
4. Disconnect the transformer electrical leads at the in-line connector
5. Release the transformer mounting screws.
6. Fit the replacement transformer and complete the reassembly in reverse order.

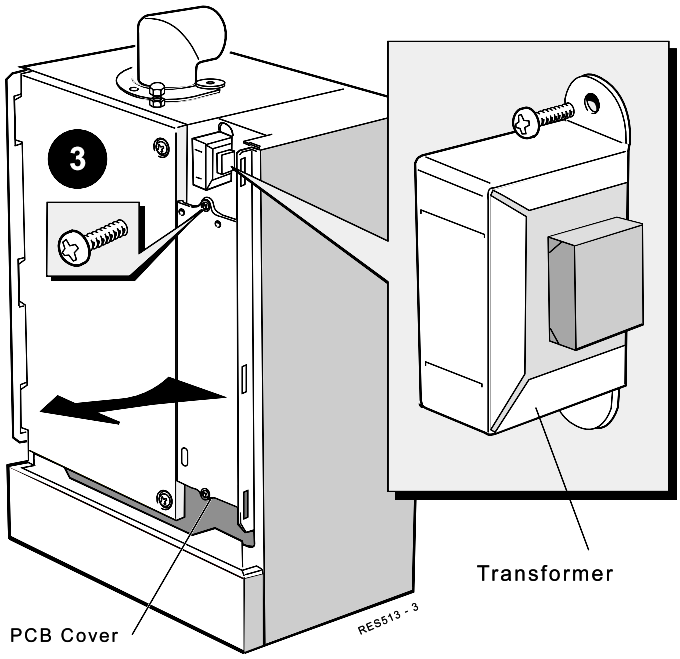

77 PRESSURE RELIEF VALVE (Safety Valve) REPLACEMENT

1. Isolate the electrical supply. Refer to Frame 54.
2. Remove the pump. Refer to Frame 69.
3. Disconnect the mains electrical connection from the bottom panel. Disengage the 2 halves of the connector.
4. Remove the boiler bottom panel.
5. Close the cocks on the CH flow and return pipework below the boiler. Drain down. Refer to Frame 68.
6. Disconnect the discharge pipe to the pressure relief valve.
7. Undo the connection securing the valve to the boiler.
8. Replace with a new valve and restore the pipework, in reverse order, using new sealing washer.
9. Open cocks, fit filling loop, fill, vent and pressurise to 1 bar (or as required).
10. Restore the electrical supply and set the heating controls, to test-fire the boiler.
11. Vent air and top up the pressure again, as required.
12. Remove the filling loop.

View of underside of boiler

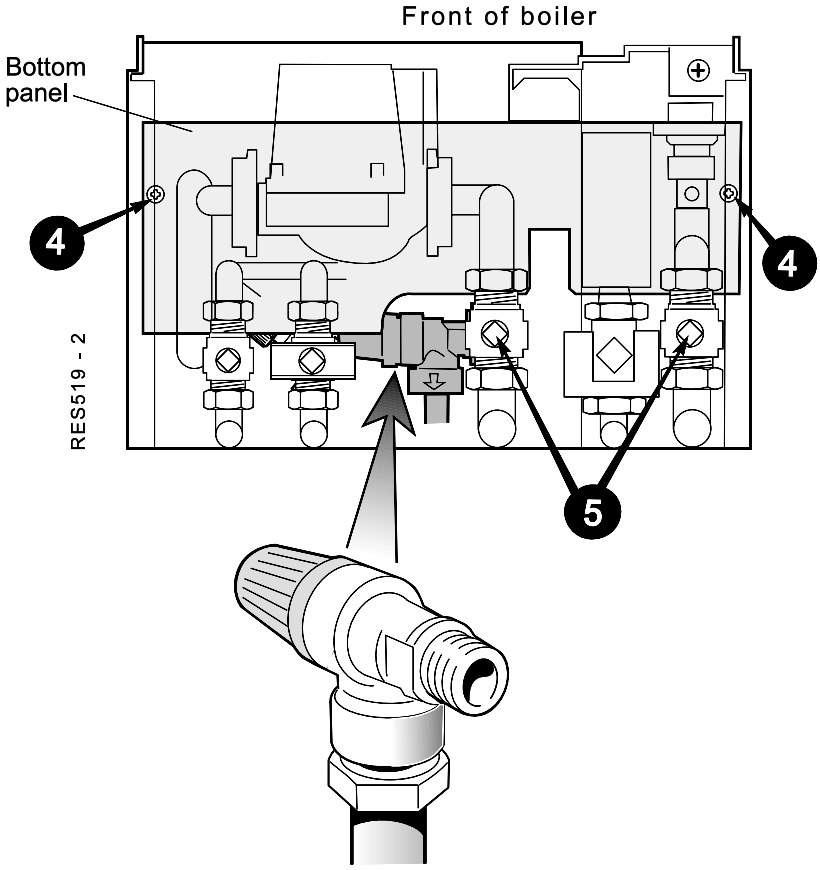

78 CH EXPANSION VESSEL REPLACEMENT

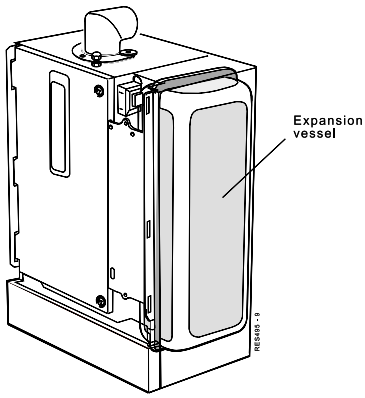

If the CH expansion vessel is faulty, there are 3 options:

A. If it has a punctured diaphragm, but is *otherwise leak free,* then it can be left in place and a new vessel added to the system, external to the boiler, provided it is of adequate capacity and pre-charge pressure.

B. If there is at least 600mm clearance above the boiler, the expansion vessel can be changed without removing the boiler (RH exit flues will have to be disturbed). Access to the water connection of the expansion vessel is *either* by removal of the right hand side boiler panel (if there is 200mm RHS clearance) *or* by removal of the fan and gas valve.

C. If there is insufficient headroom, the boiler will need to be removed. In this case, access to the water connection of the expansion vessel will be possible by removing the RH boiler side panel.

View of underside of boiler

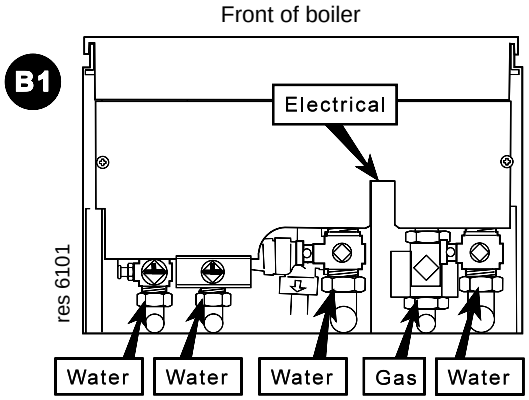

For option B, proceed as follows:

B1. Isolate the electric, gas, and water services.

B2. Drain down the boiler CH circuits, using the appropriate drain cocks.

B3. Where RH clearance is available. Unscrew the 10 screws securing the RHS panel and remove the panel to gain access to the expansion vessel connector.

Where RH clearance is NOT available. Remove the fan (refer Frame 49) and gas valve (refer Frame 62) to gain access to the expansion vessel connector.

B4. Disconnect the flue, if RH exit, and remove to the right (general details are reverse of Frames 18 & 28).

B5. Undo the 3 screws securing the boiler panel above the expansion vessel, and remove the panel.

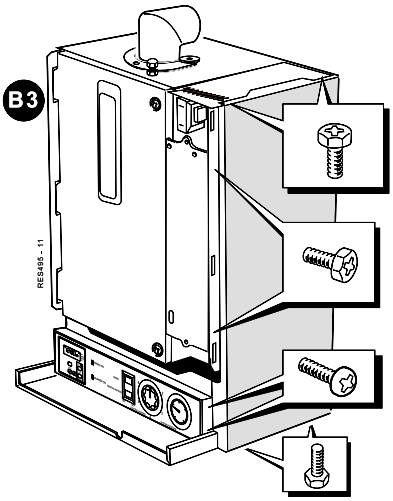

B6. Undo the water connection at the bottom of the expansion vessel. Lift out the vessel and fit the replacement, reassembling in reverse order - using new gaskets and 'O' rings where appropriate.

B7. Fill, pressurise and test.

B8. Remove the filling loop.

For option C, proceed as follows:

C1. Isolate the electrical, gas and water services.

C2. Drain down the boiler CH/HW circuits using the appropriate boiler drain cocks (refer Frame 68).

C3. Undo all service unions at the base of the boiler, and unplug and disconnect the electrical supply lead, which is secured by one screw in the centre of the boiler base.

C4. Disconnect the flue turret and place to one side (reverse of the assembly described in Frames 18 & 28).

C5. Lift the boiler off the wall and place horizontally, at a convenient working height.

C6. Follow instructions B3 to B6.

C7. Return the boiler to the wall mounting frame, remaking all connections, including the flue.

C8. Fill, pressurise and test.

C9. Remove the filling loop.

View of underside of boiler

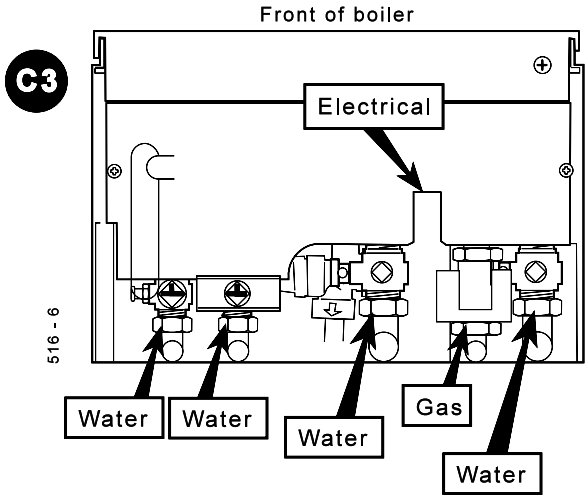

79 FAULT FINDING MAIN MENU

START THE BOILER FROM COLD

WARNING. **No part of the boiler should be touched without first isolating the mains supply.**

Note. *Switching the boiler on/off switch 'off' when a frost thermostat is wired directly from the mains may leave a live feed to the boiler.*

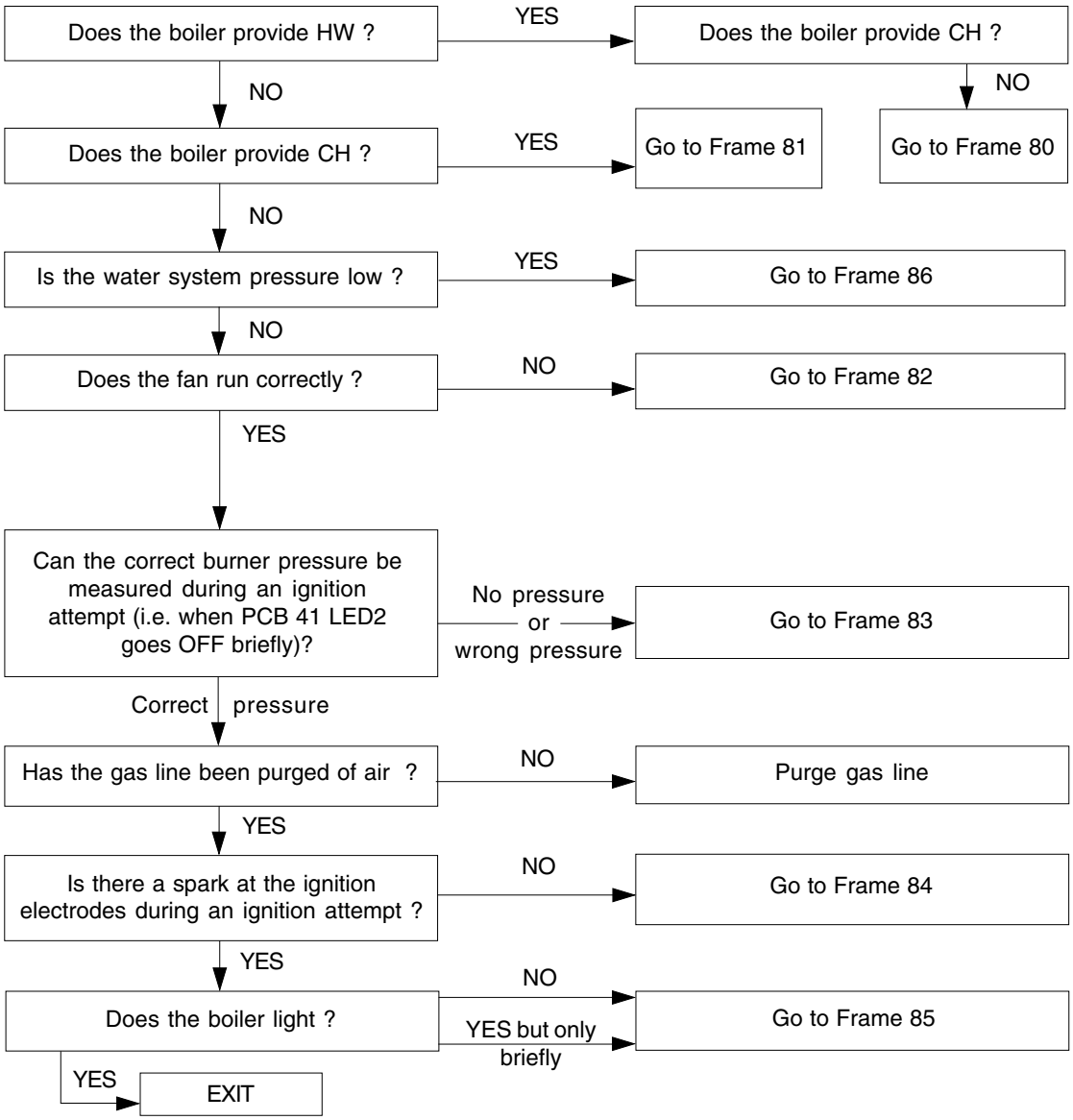

The correct sequence of operation during ignition is as follows:-

1. *Mains to boiler with water pressure switch and overheat thermostat closed.*

2. **a.** *Hot water tap turned on (HW and Fan lights come on) - the flow switch signals this to PCB 40, which starts the fan at full speed and sends power to Ignition Control PCB 41.*

or b. *Clock, heating switch and room thermostat call for heat (CH and Fan lights come on) - PCB 40 senses this, starts the fan at full speed and sends power to the pump and Ignition Control PCB 41.*

or c. *Both the above call for heat (HW and Fan lights come on) - HW takes priority, i.e. pump OFF, fan running at full speed, power to PCB 41.*

3. *If the fuse on PCB 41 is OK, the 'power' and 'lockout' LEDs PCB 41 illuminate.*

4. *After 8 seconds pre-purge time 'lockout' LED 2 goes OFF, the spark starts and the gas valve opens.*

5. *If a flame is detected the spark stops, 'lockout' LED stays OFF and the 'Burner on' neon lights - the fan speed and gas rate then adjust as dictated by boiler water temperature.*

6. *If a flame is not detected the spark stops, the gas valve closes, the fan continues to run for a post purge. The gas valve reopens and the spark restarts. PCB 41 will attempt 4 ignitions. If all 4 attempts fail the 'lockout' LED comes ON.*

Foot Note: Presence of Live supply on a terminal may be checked with a multimeter set to the appropriate AC range (apply the other probe of the meter to mains neutral, e.g. on terminal N of the programmer terminal strip).

80 HW but no CH

WARNING. When panels are removed for service, live parts are exposed so caution should be exercised when fault-finding.

Note 1. *At the end of a call for heat by the room thermostat / time control, a 2 minute pump overrun period occurs. During this time the boiler will not restart for CH* ***even if the controls are calling for heat****. This is done to prevent uneconomical 'short cycling.' This period can be curtailed by running a hot tap for a few seconds.*

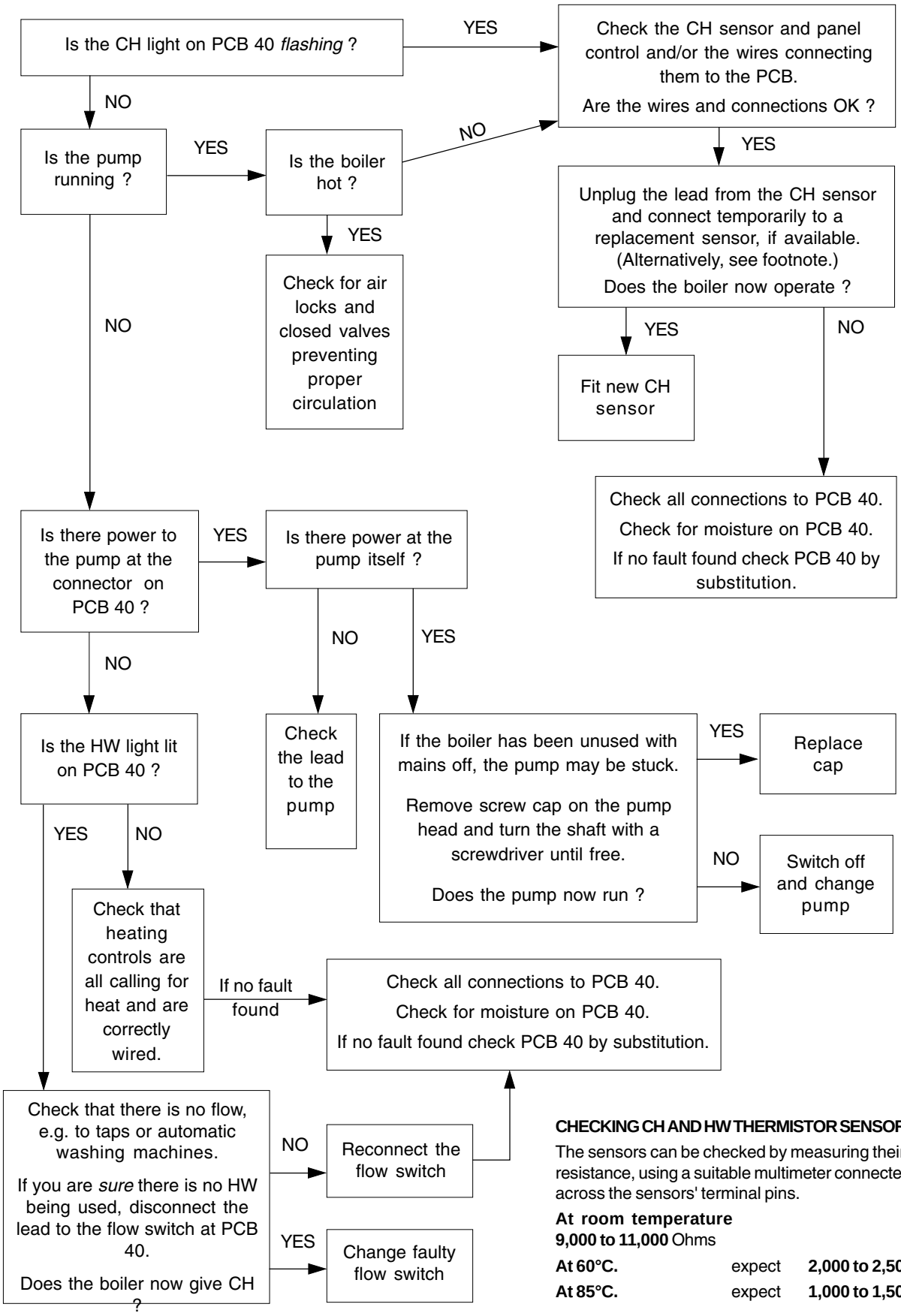

CHECKING CH AND HW THERMISTOR SENSORS

The sensors can be checked by measuring their resistance, using a suitable multimeter connected across the sensors' terminal pins.

At room temperature	expect	**9,000 to 11,000** Ohms
At 60°C.	expect	**2,000 to 2,500** Ohms
At 85°C.	expect	**1,000 to 1,500** Ohms

81 CH but no HW

WARNING.

When panels are removed for service, live parts are exposed so caution should be exercised when fault-finding.

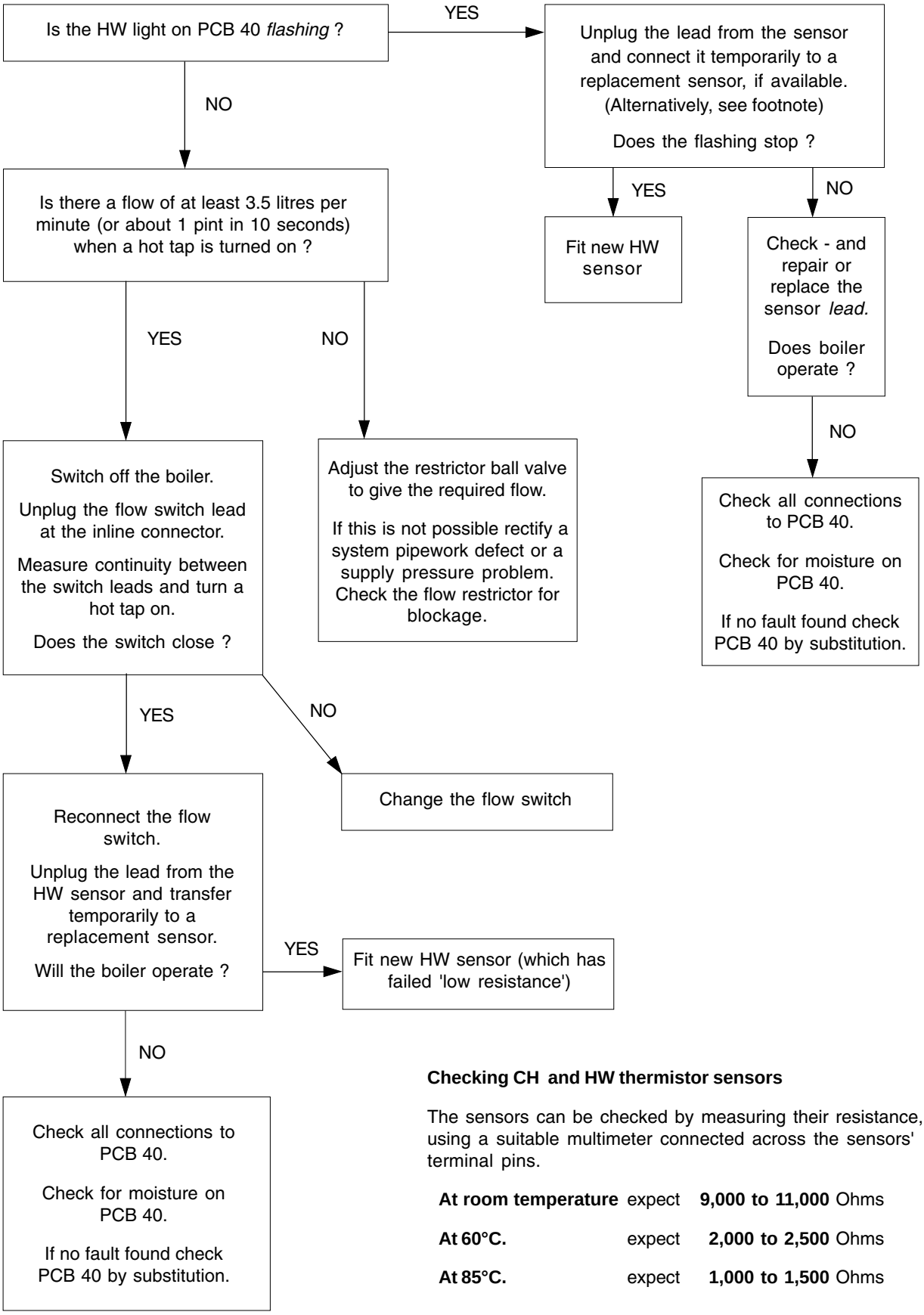

Checking CH and HW thermistor sensors

The sensors can be checked by measuring their resistance, using a suitable multimeter connected across the sensors' terminal pins.

At room temperature	expect	**9,000 to 11,000** Ohms
At 60°C.	expect	**2,000 to 2,500** Ohms
At 85°C.	expect	**1,000 to 1,500** Ohms

82 Fan not running

WARNING. When panels are removed for service, live parts are exposed so caution should be exercised when fault-finding.

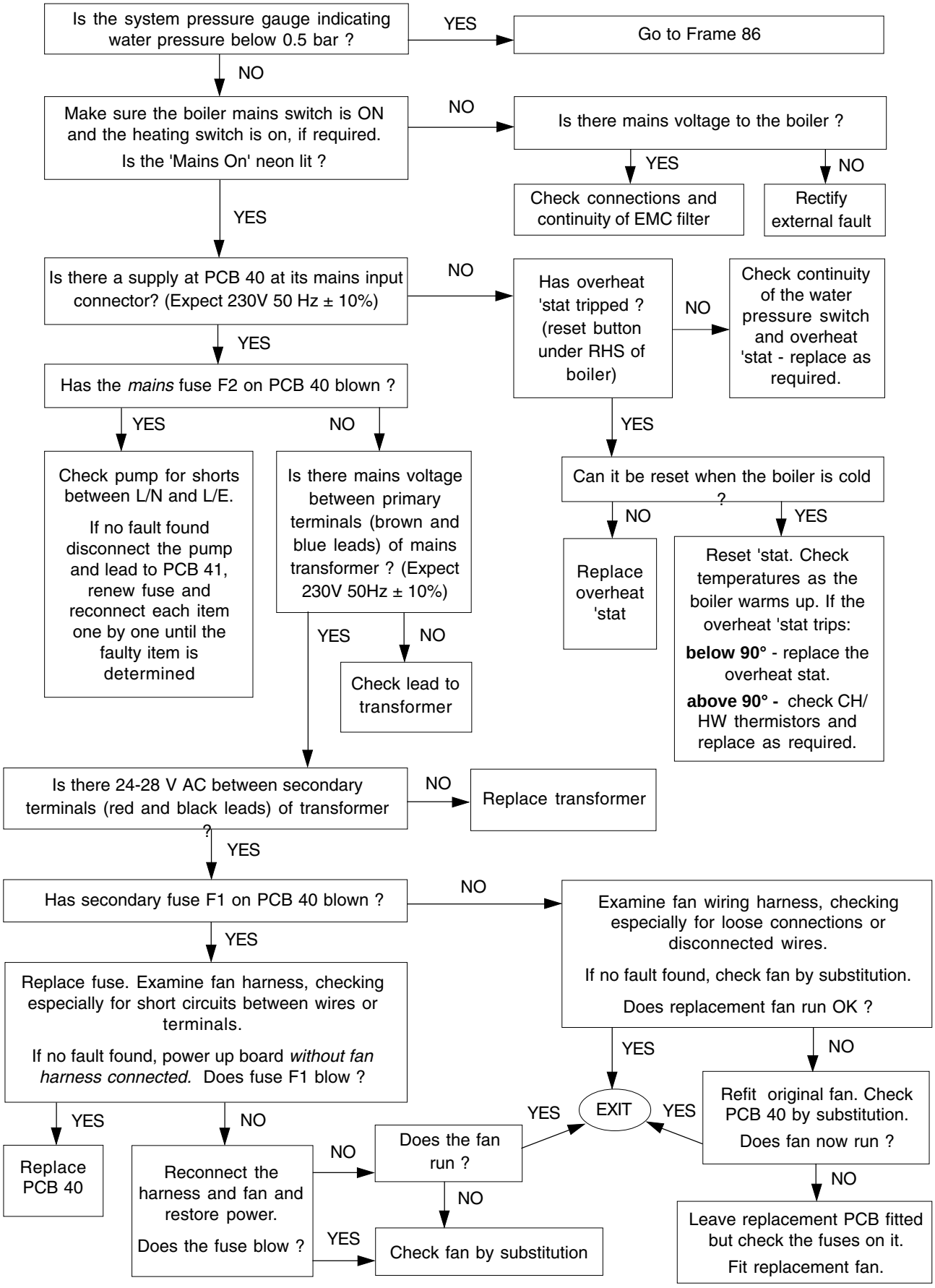

Foot Note: Presence of live supply on a terminal may be checked with a multimeter set to the appropriate AC range (apply the other probe of the meter to mains neutral, e.g. on terminal N of the programmer terminal strip).

83 Power to PCB 41 but burner pressure incorrect or zero

Notes.

1. *The burner pressure is not user-adjustable: it is regulated by the gas valve, according to the air flow generated by the fan and, on cold ignition, should be slightly higher than the value quoted on the Data Plate. Long flues will cause a slightly lower burner pressure than standard flues.*
2. *Equilibrium fan differential pressures should be as detailed in Frame 45.*

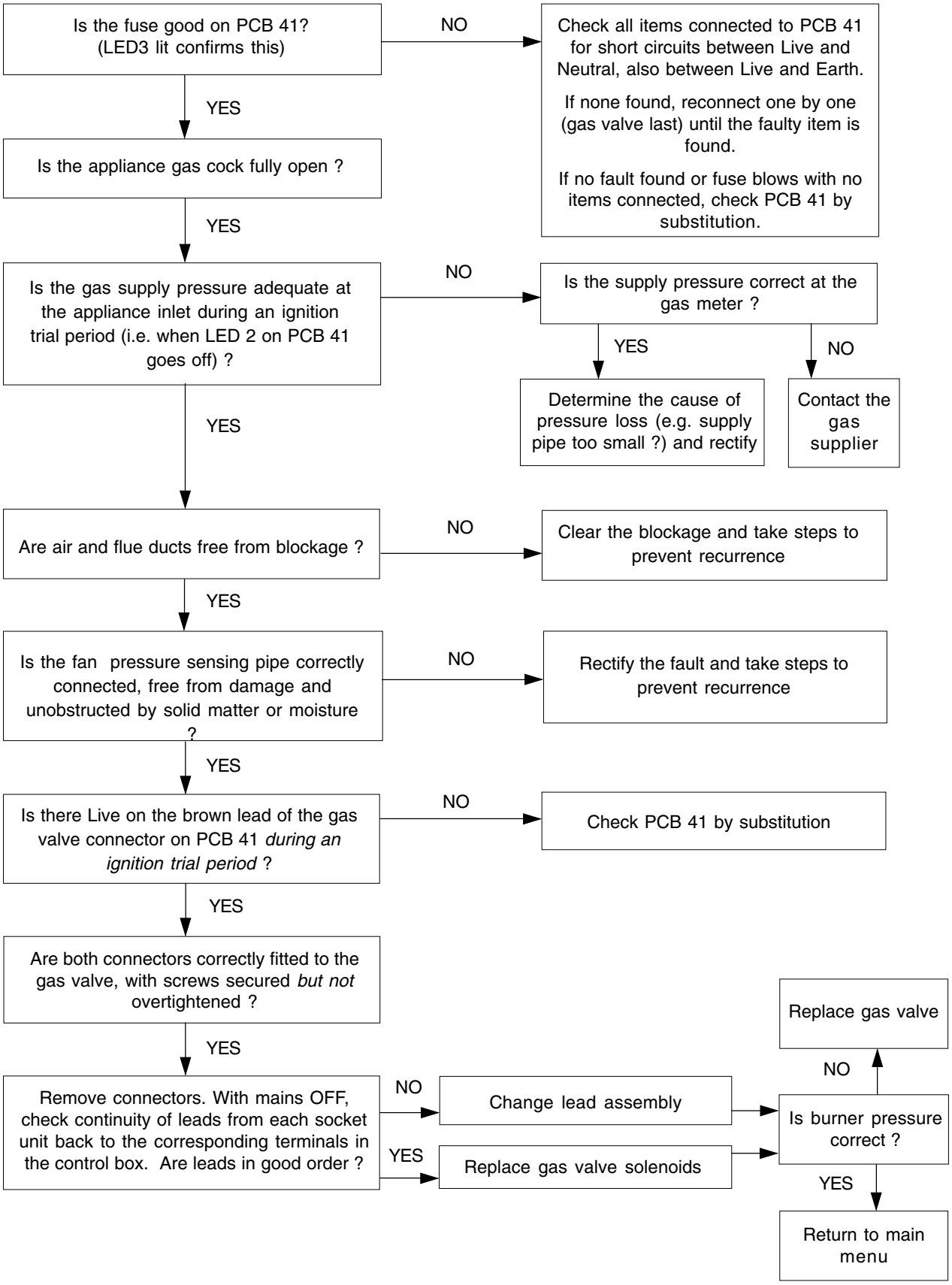

84 Spark generation and ignition

WARNING. When panels are removed for service, live parts are exposed so caution should be exercised when fault-finding.

Note. *Do not attempt to measure the voltage between the spark generator output (spark) leads !*

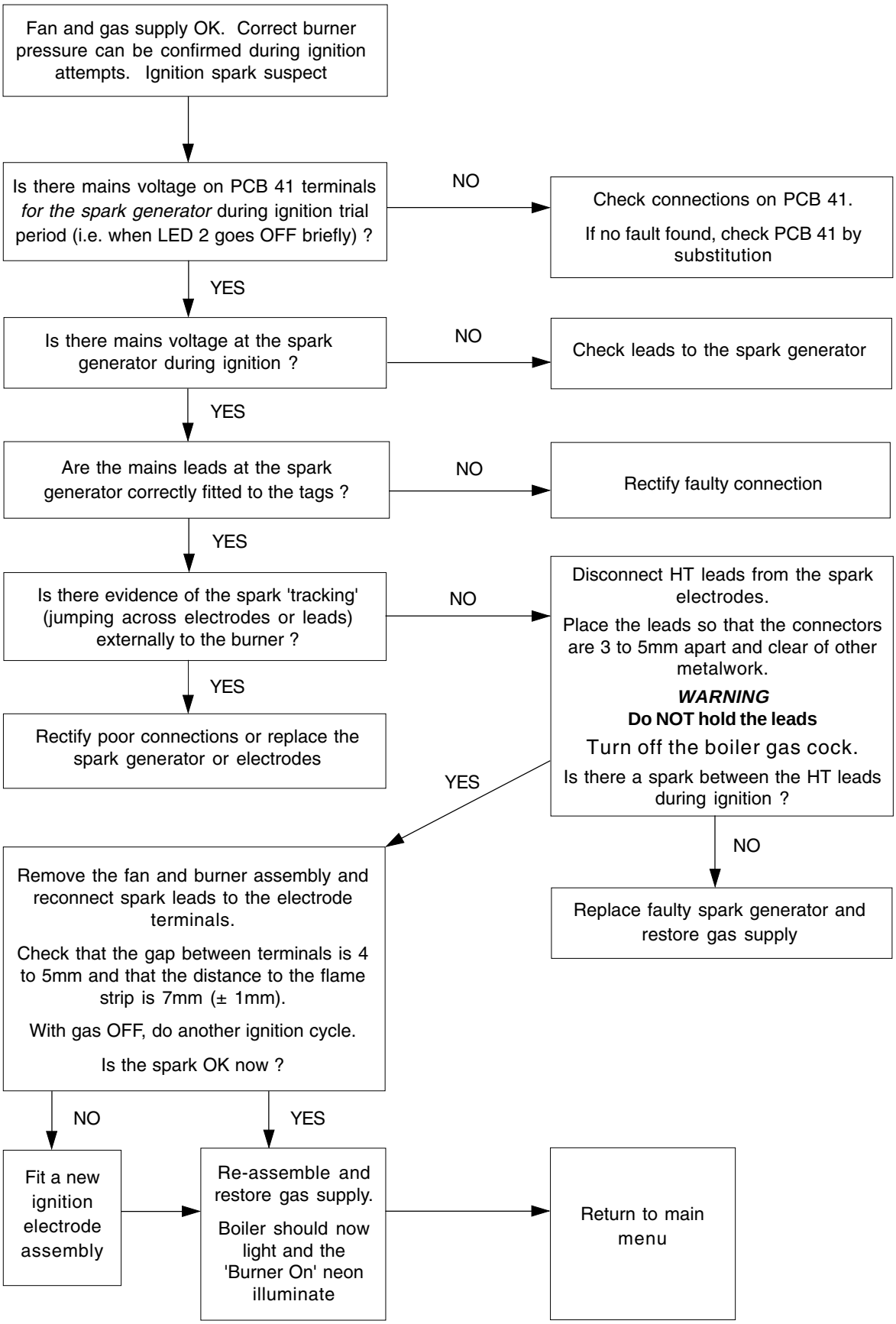

85 Flame detection and mixture

WARNING. When panels are removed for service, live parts are exposed so caution should be exercised when fault-finding.

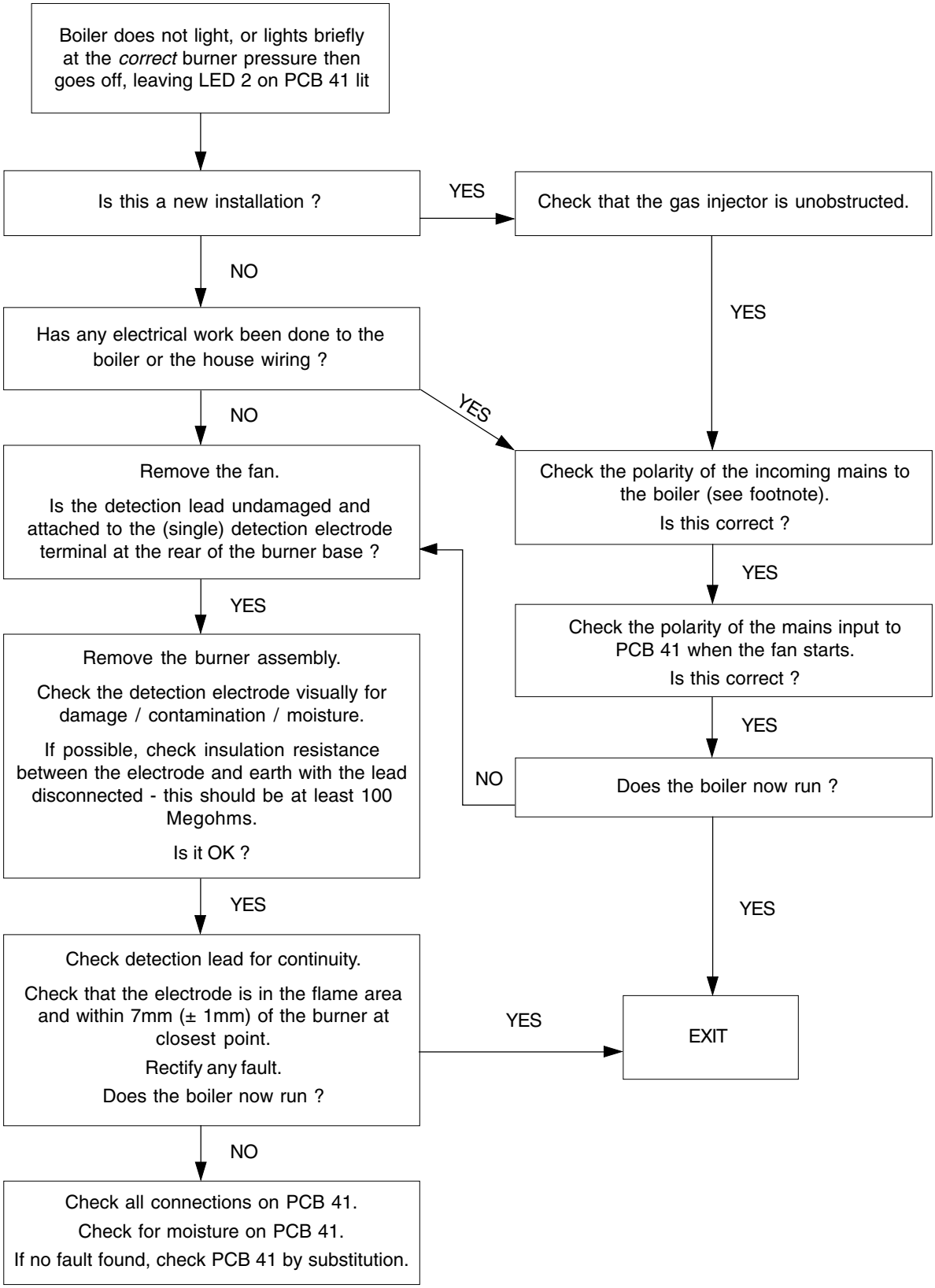

Foot Note: POLARITY CHECKS

Use a multimeter (set to measure 230 V AC or more), connecting the black lead to a reliable *Earth* point (*not Neutral for this particular test).*

You should find 230 V on terminal L and zero (or a small reading) on terminal N.

N.B. *Some meters may trip residual current devices during this test.*

86 Low system pressure indicated on pressure gauge.

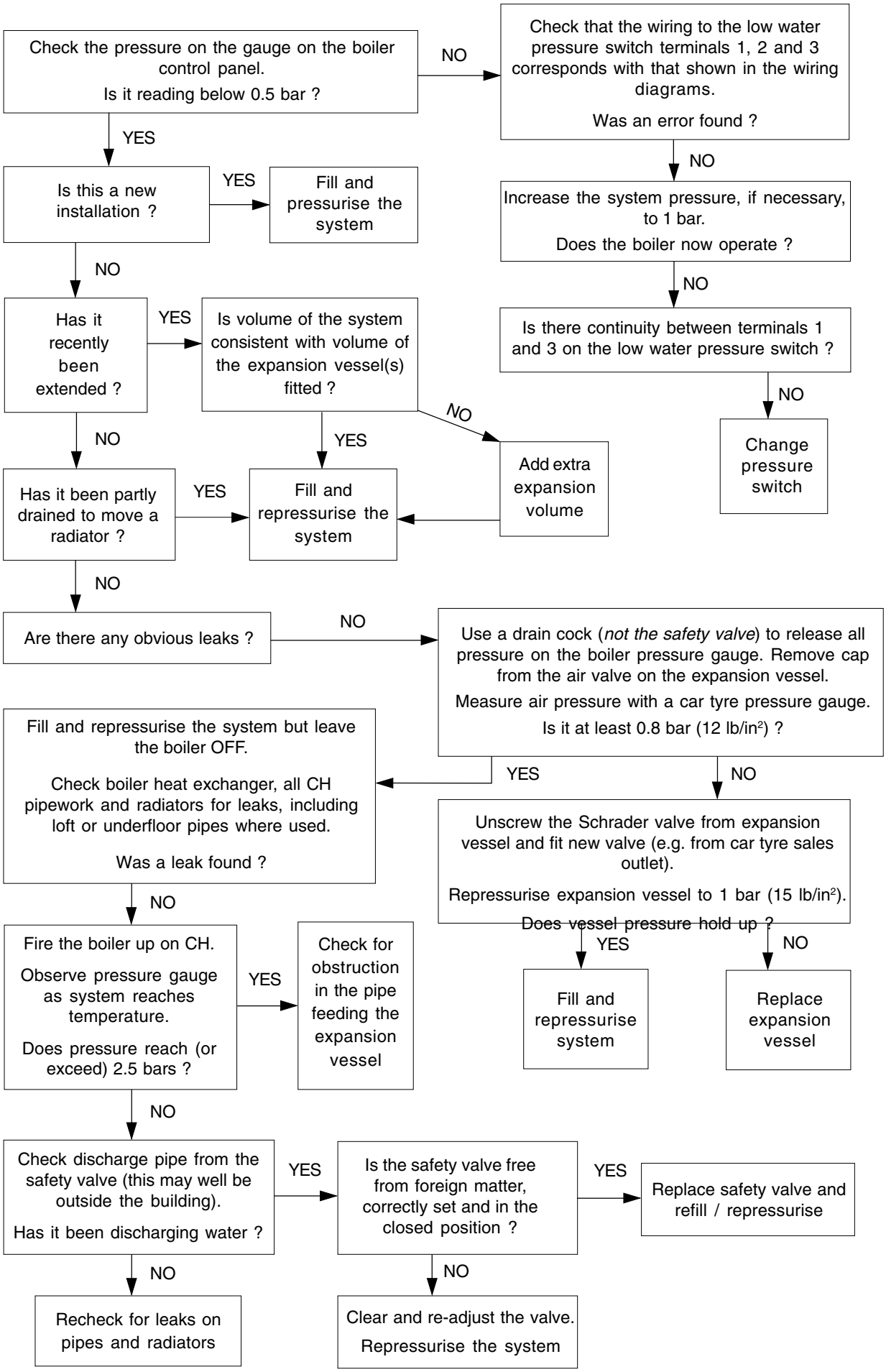

87 BURNER ASSEMBLY - Exploded View

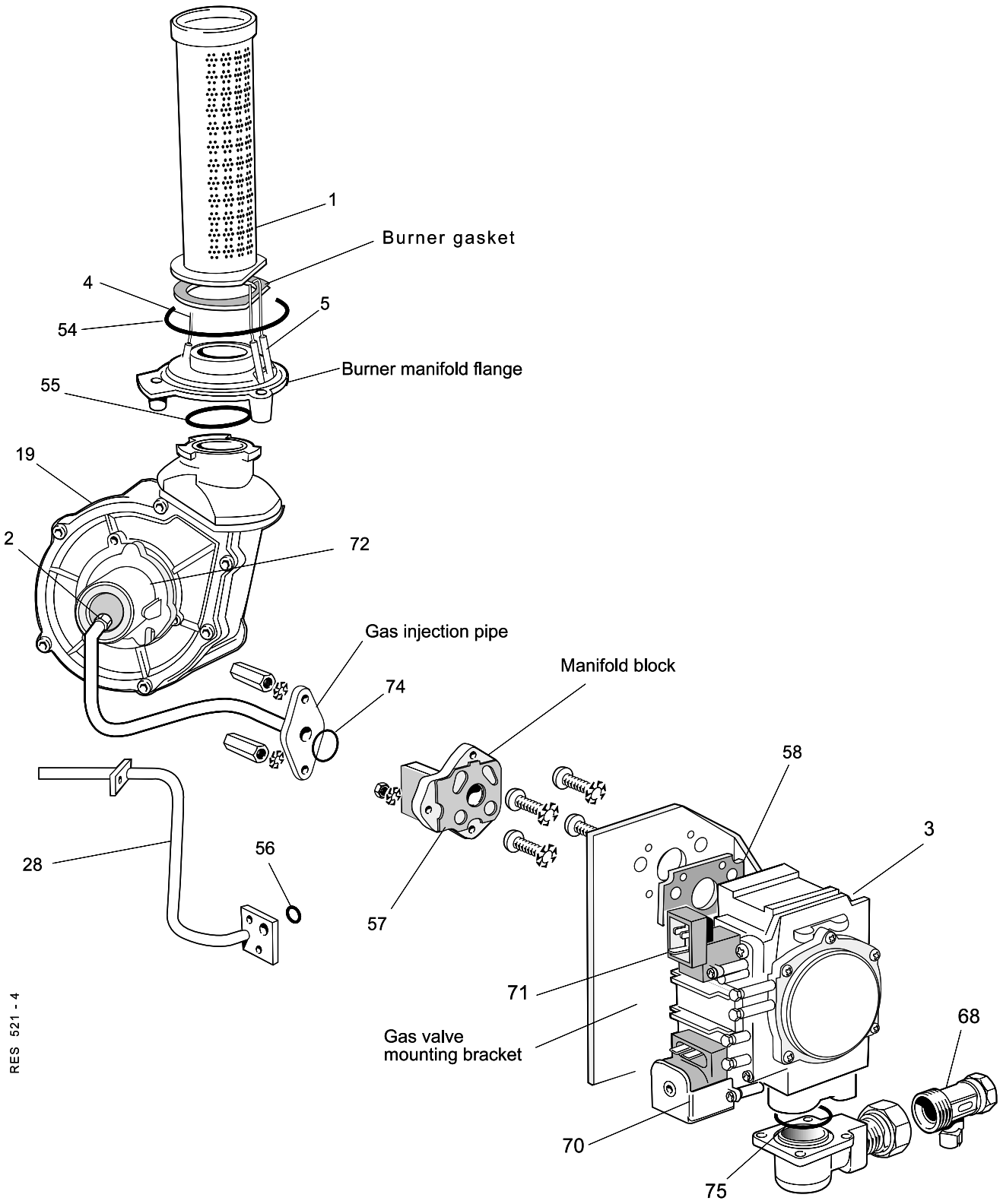

LEGEND

1. Burner.
2. Burner injector.
3. Gas valve.
4. Flame sensing electrode.
5. Ignition electrode.
19. Fan assembly.
28. Pressure sensing pipe.
29. Sensing pipe clamp plate
54. Fan / burner mounting 'O' ring.
55. Fan 'O' ring.
56. Pressure pipe 'O' ring.
57. Gas manifold gasket.
58. Gas valve gasket.
68. Gas cock 1/2".
74. Injector pipe 'O' ring.
75. Gas elbow 'O' ring.

88 CONTROLS AREA - Exploded View

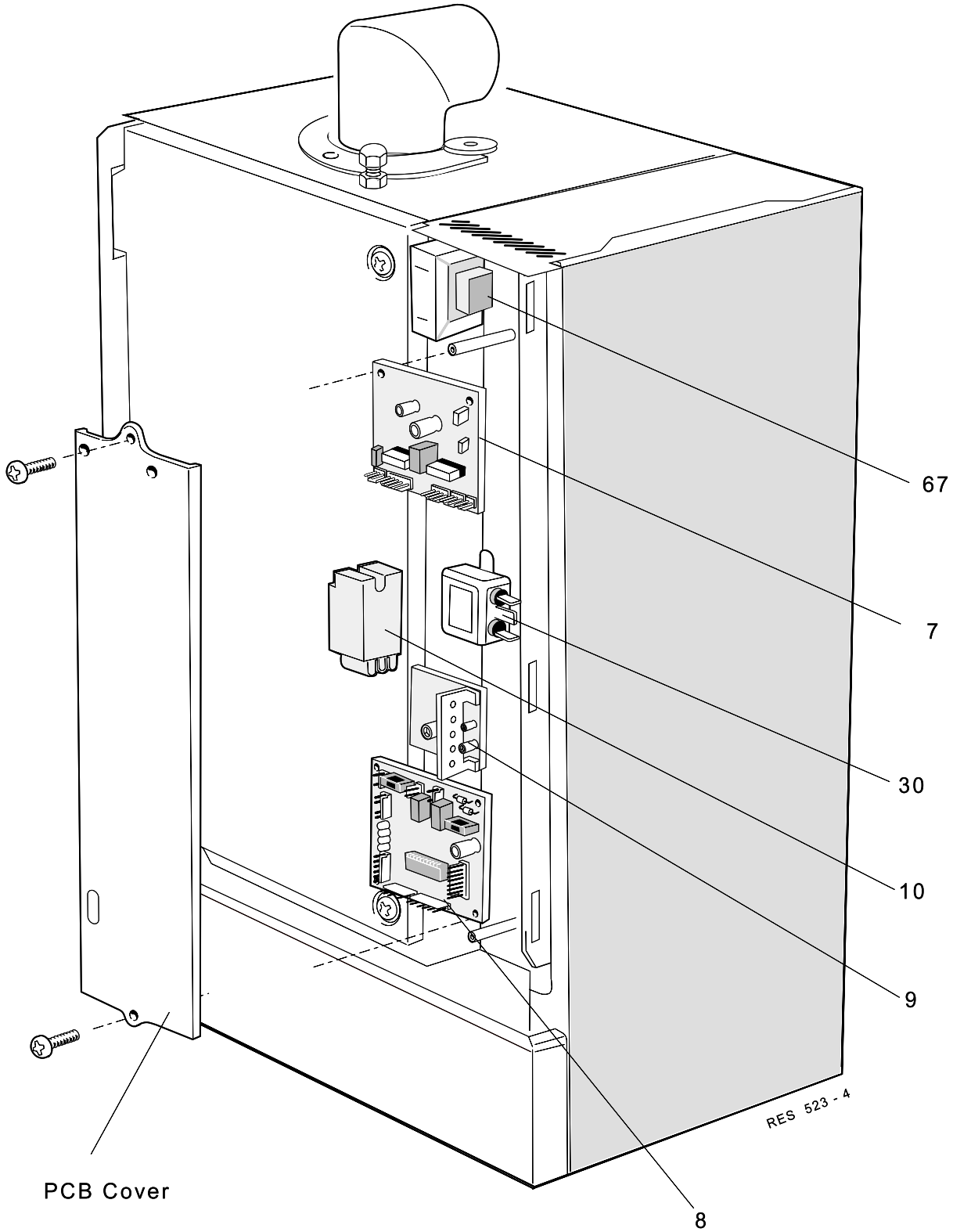

Legend

7.	PCB 41.	**9.**	Fan speed control board	**30.**	EMC filter.
8.	PCB 40.	**10.**	Spark generator assembly.	**67.**	Transformer assembly.

SHORT LIST OF PARTS

The following are parts commonly required as replacements, due to damage or expendability. Their failure or absence is likely to affect the safety and/or performance of this appliance.

The list is extracted from the British Gas List of Parts which contains all available spare parts.

The full list is held by British Gas, **Caradon Plumbing Limited** distributors and merchants.

When ordering spares please quote:

1. Boiler model (see Data Plate)
2. Appliance G.C. number (see Data Plate)
3. Description.
4. Quantity.
5. Product No.

Key No.	G.C. Part No.	Description	Qty.	Product No.
1		Main burner , c/w: 1 off burner gasket, 3 off M4 shakeproof washers, 3 off M4 x 6 lg. pozi pan hd. screws, 1 off 'O' ring, 1 off fan and burner mount		
	E26-304	Response 80	1	075524
	E26-312	Response 100/120	1	075529
2		Main burner injector		
	E00-042	Bray cat 10 /2300 C Response 80	1	139745
	E01-796	Bray cat 10 /3800 C Response 100/120	1	151010
3		Gas valve (SIT ref. 0.828.113) (calibrated) fitted with 1 off M5 x 20 lg. stud, c/w: 1 off gas valve gasket, 4 off M4 x 12 lg. pozi pan hd. screws, 4 off M5 x 10 lg. pozi pan hd. screws, 1 off O' ring		
	E01-143	Response 80	1	075212
	E01-797	Response 100/120	1	075213
4		Flame sensing electrode (Buccleuch), c/w: 1 off sensing electrode gasket, 1 off M4 x 10 lg pozi pan hd. screw, 1 off M4 shakeproof washer	1	152033
5	E01-972	Ignition electrode (Buccleuch), c/w: 1 off ignition electrode gasket, 1 off M4 x 10 lg. pozi pan hd. screw, 1 off M4 shakeproof washer	1	075269
7	E00-046	PCB 41 (Pactrol), c/w: 4 off PCB stand-offs	1	172853
8	E01-800	PCB 40 (Pactrol), c/w: 4 off PCB stand-offs	1	075264
9	E01-801	Fan speed control board (EBM) c/w 4 off PCB stand-offs	1	075265
10	E02-140	Spark generator assembly	1	151355
11	E00-049	Thermostat, boiler overheat (Ranco ref. LM7 T95 - 336)	1	138719
12		Water pressure switch assembly (Novomec ref.650 2211 037), c/w: adaptor	1	173227
13	E02-044	Thermostat, DHW overheat (Elmwood ref. 2455R), c/w: 2 off M3.5 x 6 lg. Taptite screws	1	075266
14	E00-052	CH and DHW sensor, c/w: 1 off fibre washer 10 I.D.	1	075201
15	E01-952	Potentiometer harness - includes potentiometer	1	151354
16	E00-054	Potentiometer knob.	1	139296
17	E00-055	Pressure gauge (Imit ref. lc - 964 / 66228)	1	138953
18	E00-056	Rocker switch (Arco Electric No. H8600 VB - white) (1 off mains on/off, 1 off CH on/off switch)	1	139603
19	E01-953	Fan assembly	1	139368
21	E00-059	Pressure relief valve, (Caleffi CA 312433), c/w: 1 off fibre washer, 1 off nut, 1 off 15mm olive, 1 off drain pipe.	1	075178

SHORT LIST OF PARTS

Key No.	G.C. Part No.	Description	Qty.	Product No.
22	E00-060	DHW expansion vessel (Zilmet ref. Zi 160 S/D 1/4"), c/w: 1 off 1/4" fibre washer.	1	075179
23	E00-061	CH expansion vessel - 8 litre (Zilmet ref. Zi 304080), c/w: 1 off 1/2" fibre washer.	1	075200
24	E84-150	Circulating pump complete	1	172 606
25	E00-064	DHW flow switch assembly	1	139717
26	379-796	Automatic air vent (Caleffi ref. CA 502630), including 'O' ring	1	113116
28		Pressure sensing pipe assembly c/w:gas valve mount 'O' ring, 2 off M4 x 8 lg. pozi pan hd. screw		
		Response 80	1	152036
	E02-110	Response 100/120	1	150554
30	E00-069	EMC filter	1	112757
31	E00-070	Sealed casing seal pack (2 off top / bottom seals, 2 off side seals)	1	075184
40	E01-656	Boiler front panel assembly	1	151200
42	E00-080	Boiler LH side panel assembly, c/w: 6 off M4 x 10 lg. pozi hex hd. screws	1	075192
43	E00-081	Boiler RH side panel assembly, c/w: 6 off M4 x 10 lg. pozi hex hd. screws	1	075193
44	E00-082	Tank cover panel assembly, c/w: 3 off M4 x 10 lg. pozi hex. hd. screws	1	075194
45		Controls pod door assembly consisting of: controls pod door, counter plate, Lighting Instruction Plate, 2 off buffer pads		
	E02-148	Response 80	1	075261
		Response 100	1	075338
	E02-117	Response 120	1	075262
52	E02-121	26mm O.D. fibre washer	1	151388
53	E02-122	12mm O.D. fibre washer	1	150937
54	E00-092	Fan and burner mounting 'O' ring	1	138112
55	E00-093	Fan 'O' ring	1	111739
56	E00-094	Sensing pipe 'O' ring (manifold block end)	1	139945
57	E00-096	Gas manifold gasket	1	112043
58	E00-097	Gas valve gasket	1	111733
66	E01-659	Controls panel assembly		075208
67	E02-133	Transformer assembly	1	151011
72	-	Venturi assembly Response 80	1	139355
		Response 100/120	1	151863
73	E01-636	7/8" sealing washer	1	113048

SHORT LIST OF PARTS

89 SHORT PARTS LIST

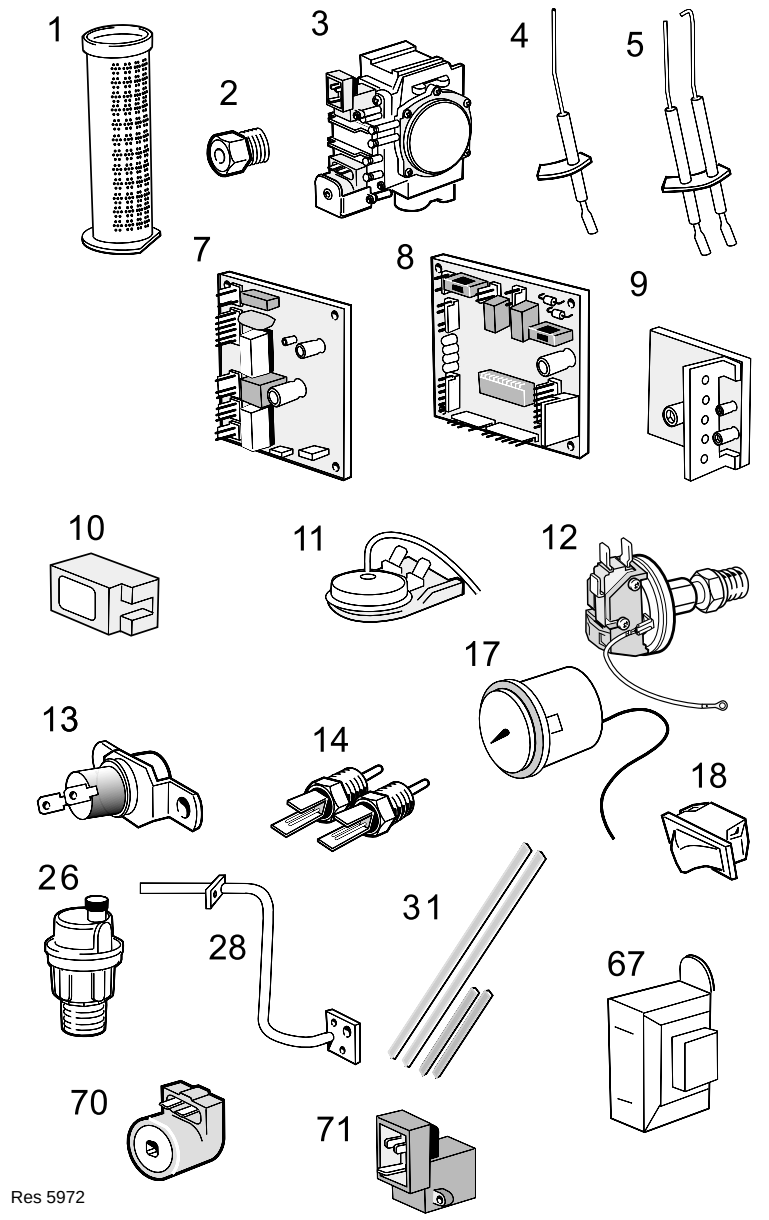

90 BOILER CASING ASSEMBLY

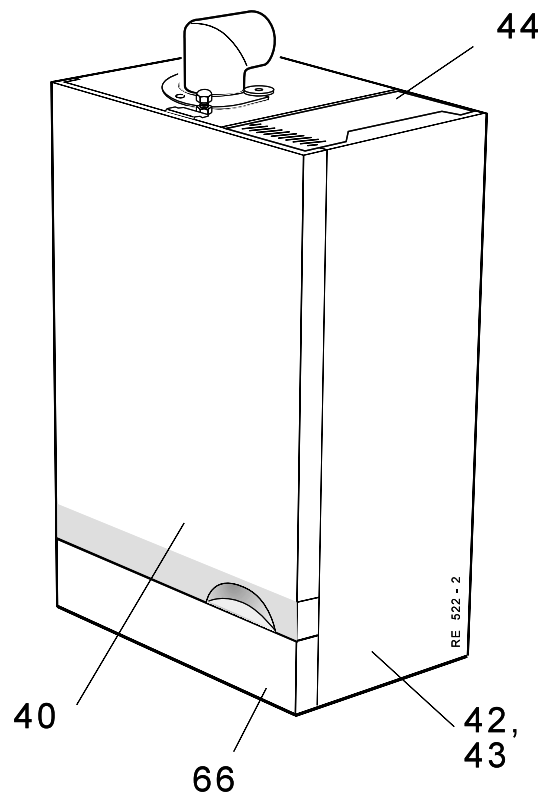

NOTES

NOTES

The code of practice for the installation, commissioning & servicing of central heating systems

Technical Training

The Ideal Boilers Technical Training Centre offers a series of first class training courses for domestic, commercial and industrial heating installers, engineers and system specifiers.
For details of courses please ring: 01482 498 432

CERTIFIED PRODUCT
Manufactured under a BS EN ISO 9001: 1994
Quality System accepted by BSI

Ideal Boilers, P.O. Box 103, National Ave, Kingston upon Hull, HU5 4JN. Telephone: 01482 492 251 Fax: 01482 448 858. Registration No. London 322 137.

Caradon Ideal Limited pursues a policy of continuing improvement in the design and performance of its products. The right is therefore reserved to vary specification without notice.

April 2003 UIN 152 318 A12

Caradon
Ideal Limited

Ideal Installer/Technical Helpline: 01482 498663
www.idealboilers.com