Installation and Servicing Instructions

E-Tec Plus 28, 33 and 38

Wall Mounted, Fan Assisted, Room Sealed, Gas Fired, High Efficiency Condensing Combination Boiler

For Technical help or for Service call ...
ALPHA HELPLINE Tel: 0344 871 8764
website: www.alpha-innovation.co.uk

Alpha
HEATING INNOVATION

Nepicar House, London Road,
Wrotham Heath, Sevenoaks,
Kent TN15 7RS

Alpha E-Tec Plus 28	G.C. No. 47 532 77
Alpha E-Tec Plus 33	G.C. No. 47 532 78
Alpha E-Tec Plus 38	G.C. No. 47 532 79

benchmark
COLLECTIVE MARK
THE MARK OF QUALITY FOR THE INSTALLATION, COMMISSIONING AND SERVICING OF DOMESTIC HEATING AND HOT WATER SYSTEMS

Leave these instructions with the User

These instructions have been carefully prepared but we reserve the right to alter the specification at any time in the interest of product improvement.
© Alpha Therm Limited 2022.

Part No. 1.047102 rev. ST.006281/000
0322/D438

BENCHMARK SCHEME

To comply with Building Regulations Part L1 (Part 6 in Scotland) the boiler should be installed in accordance with the manufacturer's instructions. Self-certification that the boiler has been installed to comply with Building Regulations can be demonstrated by completing and signing the Benchmark Checklist at the back of these instructions.

Code of Practice

For the installation, commissioning and servicing of domestic heating and hot water products.

Benchmark places responsibilities on both manufacturers and installers*. The purpose is to ensure that customers** are provided with the correct equipment for their needs, that it is installed, commissioned and serviced in accordance with the manufacturer's instructions by competent persons and that it meets the requirements of the appropriate Building Regulations. Installers are required to carry out work in accordance with the following:

Standards of Work

- Be competent and qualified to undertake the work required.
- Install, commission, service and use products in accordance with the manufacturer's instructions provided.
- Ensure that where there is responsibility for design work, the installation is correctly sized and fit for purpose.
- Meet the requirements of the appropriate Building Regulations. Where this involves notifiable work be a member of a Competent Persons Scheme or confirm that the customer has notified Local Authority Control (LABC), prior to work commencing.
- Complete all relevant sections of the Benchmark Checklist/Service Record when carrying out commissioning or servicing of a product or system.
- Ensure that the product or system is left in a safe condition and, where possible, in good working order.
- Highlight to the customer any remedial or improvement work identified during the course of commissioning or servicing work.
- Refer to the manufacturer's helpline where assistance is needed.
- Report product faults and concerns to the manufacturer in a timely manner.

Customer Service

- Show the customer any identity card that is relevant to the work being carried out prior to commencement or on request.
- Give a full and clear explanation/demonstration of the product or system and its operation to the customer.
- Hand over the manufacturer's instructions, including the Benchmark Checklist, to the customer on completion of an installation.
- Obtain the customer's signature on the Benchmark Checklist to confirm satisfactory demonstration and receipt of manufacturer's instructions.
- Advise the customer that regular product servicing is needed, in line with manufacturers' recommendations, to ensure that safety and efficiency is maintained.
- Respond promptly to calls from a customer following completion of their work, providing advice and assistance by phone and, if necessary, visiting the customer.
- Rectify any installation problems at no cost to the customer during the installer's guarantee period.

* The use of the word "installer" is not limited to installation itself and covers those carrying out installation, commissioning and/or servicing of heating and hot water products, or the use of supporting products (such as water treatment or test equipment).

** Customer includes householders, landlords and tenants.

Benchmark Commissioning and Servicing Section

It is a requirement that the boiler is installed and commissioned to the manufacturers instructions and the data fields on the commissioning checklist completed in full.

To instigate the boiler guarantee the boiler needs to be registered with the manufacturer within one month of the installation.

To maintain the boiler guarantee it is essential that the boiler is serviced annually by a Gas Safe registered engineer who has been trained on the boiler installed. The service details should be recorded on the Benchmark Service Interval Record and left with the householder.

www.centralheating.co.uk

benchmark COLLECTIVE MARK
THE MARK OF QUALITY FOR THE INSTALLATION, COMMISSIONING AND SERVICING OF DOMESTIC HEATING AND HOT WATER SYSTEMS

Useful contact details: **Gas Safe Register** - 0800 408 5577 - www.gassaferegister.co.uk

Alpha Heating Innovation: General Sales Enquiries - 0344 871 8760
Technical Helpline - 0344 871 8764

CONTENTS

1 Introduction.....3
2 Safety symbols and information 4
3 Technical data 6
4 General boiler information 12
5 Installation 19
6 Commissioning.....28
7 Routine servicing.....37
8 Component replacement 43
9 Wiring diagram 48
10 Error codes and fault finding.....49
11 Short parts list 52
12 Energy classification.....53
Benchmark Checklist.....60
Service Record.....61

1 INTRODUCTION

The E-Tec Plus 28, 33 and 38 are wall mounted, room sealed, fan assisted, high efficiency, condensing boilers. The burner is lit electronically and the heat output is controlled by a modulating fan and gas valve.

The E-Tec Plus 28, 33 and 38 are combination boilers providing both central heating and domestic hot water at mains pressure.

The boiler is supplied with a pump, pressure relief valve, expansion vessel and pressure gauge fully assembled and tested. It is designed for use with a fully pumped, sealed and pressurised central heating system.

The boiler is approved for operation with Natural Gas (G20), a mixture of Natural Gas and Hydrogen at 20% by volume (G20Y20) and LPG (G31).

IMPORTANT

Failure to install and commission this appliance in compliance with the manufacturer's instructions may invalidate the warranty.

It is the law that all gas appliances are installed by a competent person, ie Gas Safe registered personnel, in accordance with the following recommendations:-

Current Gas Safety (Installation and Use) Regulations

All current Building Regulations issued by the Department of the Environment, i.e. Approved Document L26.

Building Standards (Scotland) (Consolidation) Regulations issued by the Scottish Development Department

UK Water Regulations/Byelaws (Scotland)

Health & Safety Document No. 635 (The Electricity At Work Regulations 1989)

The installation should also be in accordance with the following British Standard Codes of Practice:-

BS 5440-1: 2008.....Flueing and Ventilation Requirements
BS 5440-2: 2009.....Installation and Maintenance of Flues and Ventilation
BS 5546: 2010.....Specification for Water Heating Appliances
BS 6798: 2009.....Specification for Installation gas fired boilers up to 70 kW
BS 6891: 2005 + A2: 2008.....Installation of low pressure Gas Pipework
IGEM/UP/2 .....Installation of pipework
IGEM/UP/4 .....Commissioning of gas fired plant
IGE/UP/10 .....Installation of Flued gas appliances
IGEM/UP/16 .....Design for natural gas installations
IGE/UP/1 and 1B.....Strength Testing and tightness testing Natural Gas Installations

Reference should also be made to any other standards and requirements relating to the installation depending on the location and use.

Reference should be made to DEFRA document 'Guide to condensing boiler installation assessment procedures for dwellings'.

If installation is in a timber framed building, refer to the Institute of Gas Engineers document IGE/UP/7.

This appliance meets the requirements of IPX5D, ie degree of protection against moisture.

This appliance contains no asbestos and no substances have been used in the construction process that contravene the COSHH Regulations (Control of Substances Hazardous to Health).

Failure to install this appliance correctly could lead to prosecution. It is in your own interest and that of safety to ensure that the law is complied with.

Manufacturer's instructions must **NOT** be taken in anyway as over-riding statutory obligations.

Any modifications to the appliance not explicitly indicated in this manual is forbidden.

Failure to comply with the installation instructions implies personal responsibility and may invalidate the warranty.

Notes:
1. Ensure that the Benchmark Checklist has been completed after the boiler has been installed and commissioned.
2. It is the law that all domestic boiler installations are registered by the installer through the Gas Safe Notification Scheme.
3. The boiler must only be used with Alpha CD condensing flue components.

Propane Gas (LPG) - In addition to the regulations and requirements stated, the boiler **must be** installed in accordance with BS 5482:1 - The Installation of Propane Burning Appliances in Permanent Dwellings.

2 SAFETY SYMBOLS and INFORMATION

GENERIC HAZARD
Strictly follow all of the indications next to the symbol. Failure to follow the indications can generate hazard situations resulting in possible harm to the health of the operator and user in general.

ELECTRICAL HAZARD
Strictly follow all of the indications next to the symbol. The symbol indicates the appliance's electrical components or, in this manual, identifies actions that can cause an electrical hazard.

MOVING PARTS
The symbol indicates the appliance's moving components that can cause hazards..

HOT SURFACES
The symbol indicates the appliance's very hot components that can cause burns.

SHARP SURFACES
The symbol indicates the appliance's components or parts that can cause cuts if touched.

EARTH TERMINAL CONNECTION
The symbol identifies the appliance's earth terminal connection point.

READ AND UNDERSTAND THE INSTRUCTIONS
Read and understand the appliance's instructions before performing any operation, carefully following the indications provided.

INFORMATION
Indicates useful tips or additional information.

RECOVERABLE OR RECYCLABLE MATERIAL

The user must not dispose of the appliance at the end of its service life as municipal waste, but send it to appropriate collection centres.

PERSONAL PROTECTIVE EQUIPMENT

SAFETY GLOVES

SAFETY GOGGLES

SAFETY FOOTWEAR

2.1 ELECTRICAL SUPPLY

ATTENTION:

The power supply cable must be connected to a 230 V ±10% / 50 Hz mains supply respecting L - N polarity and earth connection; ⏚, this must be connected to a fused 3 A double pole switch with class III overvoltage category (contact separation of at least 3 mm in both poles) or a fused 3 A 3-pin plug and unswitched shuttered socket outlet (both complying with BS 1363) in compliance with installation regulations.

The boiler is supplied with a 'Special X' type electrical connection with a PVC <HAR> H05VV-F 3 x 0.75 cable without a plug.

If the power cable is damaged or replaced, it must be replaced with a cable supplied by Alpha or authorized After-Sale Technical Service. Replacement is recommended using a qualified company in order to prevent any risk.

The boiler must be earthed.

There must only be one common isolator, providing complete electrical isolation, for the boiler and any external controls.

Wiring external to the boiler must be in accordance with the current IEE Wiring Regulations (BS 7671).

Note: If a room thermostat is fitted, it must be suitable for 230 V switching.

If the boiler is locked out and an error code is shown on the display, the **RESET** button can be pressed to try and clear the fault. If the fault still occurs after pressing the **RESET** button, then contact an approved engineer or Alpha service support department.

2.2 DOMESTIC HOT WATER SYSTEM

The minimum flow rate needed for the flow switch and burner to operate is 1.5 litres/min.

The incoming mains water pressure should be between 0.2 bar (0.02 MPa) and 5 bar (0.5 MPa) to ensure efficient operation. If the pressure is above 5 bar a pressure reducing valve must be fitted.

Following Part L Building Regulations, where the mains water hardness exceeds 200 parts per million, provision should be made to treat the feed water to the hot water circuit of combination boilers to reduce the rate of accumulation of limescale.

To ensure economic use, the pipe runs between the boiler and taps should be in 15 mm copper pipe and be as short as possible. Where possible the pipework should be insulated to reduce heat loss.

All taps and mixing valves used with the hot water system must be suitable for operating at a mains pressure of up to 8 bar.

Showers - A shower may be used with the boiler if required.

If a loose or flexible head type shower is used it may require the fitting of a double check valve, to comply with Water Bye Law 17.

Bidets - No anti-syphonage arrangements are necessary, provided the outlets are shrouded and it is not possible to attach a temporary hand held spray. A supply of direct mains fed hot and cold water is permitted provided the appliance is of the over-rim flushing type.

If the mains supply is fitted with a water meter, check valve or loose jumper stop cock, then a DHW expansion device **MUST be** fitted.

Before the mains water supply pipe is connected to the boiler, it should be thoroughly flushed out to avoid the danger of dirt or foreign matter entering the boiler.

2.3 PHYSICAL DATA

Boiler flow and return connections		mm	22
DHW inlet (cold) DHW outlet (hot) connections		mm	15
Gas connection diameter		mm	22
Boiler dimensions	Height	mm	712
	Width	mm	440
	Depth	mm	268
Clearances for servicing	Bottom	mm	150
	Bottom (with jig)	mm	250
	Top (horizontal flue)	mm	235
	Top (vertical flue)	mm	150
	Sides	mm	5
	Front	mm	450
Recommended hole size for flue pipe		mm	110
Recommended hole size for instalation from inside the building		mm	130
Boiler dry lift weight	E-Tec Plus 28	kg	33.6
	E-Tec Plus 33	kg	35.5
	E-Tec Plus 38	kg	36.7
Boiler operating weight (full of water) approx.	E-Tec Plus 28	kg	35.8
	E-Tec Plus 33	kg	37.9
	E-Tec Plus 38	kg	40.5
Max. total flue length	Horizontal	m	12
Max. total flue length	Vertical	m	14
Flue system diameter		mm	60/100

3 TECHNICAL DATA

3.1 TECHNICAL PERFORMANCE DATA - NATURAL GAS (Cat I2H 2H - G20 20 mbar)

		E-Tec Plus 28	E-Tec Plus 33	E-Tec Plus 38
Heat input gross - DHW	kW	32.0	36.2	43.3
Heat input gross - CH	kW	27.3	31.7	36.3
Heat input net - DHW	kW	28.8	32.6	39
Heat input net - CH	kW	24.6	28.6	32.7
Heat input net DHW (G20Y20)	kW	26.4	31.3	36.9
Heat input net CH (G20Y20)	kW	22.6	27.0	31.1
Heat output condensing (50/30°C) - CH	kW	26.1	29.7	34.4
Heat output non condensing (80/60°C) CH	kW	24.1	28	32
Heat input minimum gross	kW	5.0	5.7	7.0
Heat input minimum net	kW	4.5	5.1	6.3
Heat output minimum - CH	kW	4.3	4.9	6.1
Heat output nominal - DHW	kW	28.3	32	37.9
Gas rate at maximum output	m³/h	3.05	3.45	4.13
Gas supply pressure	mbar	20	20	20
Max. CH temperature - Set point	°C	85	85	85
Gas burner injector diameter	mm	4.90	5.75	6.55
DHW flow rate at 35°C rise	l/min	12.1	14.1	15.9
DHW flow rate at 30°C rise - EN13203-1	l/min	14.1	16.5	18.6
Dry NOx weight (net calorific value)	mg/kWh	35	30	39
Dry NOx	ppm	20	17	22
NOx	Class	6	6	6
Factory set CO2				
CO2 at maximum CH output	%	9.7	9.5	9.2
O2 at maximum CH output	%	3.5	3.9	4.5
CO2 at maximum DHW output	%	9.7 (+0.4/-0.2%)	9.5 (+0.1/-0.2%)	9.2 (+0.4/-0.2%)
O2 at maximum DHW output	%	3.5 (+0.4/-0.6%)	3.9 (+0.3/-0.2%)	4.5 (+0.3/-0.5%)
CO2 at minimum output	%	8.8 (+0.2/-0.3%)	8.6 (+0.2/-0.3%)	8.5 (+0.1/-0.3%)
O2 at minimum output	%	5.2 (+0.5/-0.3%)	5.5 (+0.5/-0.4%)	5.7 (+0.6/-0.2%)
CO (max)	ppm	450	450	450
Maximum CO/CO2	Ratio	0.004	0.004	0.004
SAP/SEDBUK seasonality efficiency 2005	%	90.2	90.2	90.2
SAP/SEDBUK seasonality efficiency 2009	%	88.9	89.0	89.0
ErP DHW efficiency	%	87 (XL)	87 (XL)	85 (XL)
ErP Seasonal space heating efficiency	%	93	93	93
Maximum primary system pressure	bar (MPa)	2.5 (0.25)	2.5 (0.25)	2.5 (0.25)
Minimum primary system pressure	bar (MPa)	0.5 (0.05)	0.5 (0.05)	0.5 (0.05)
Recommended system pressure - Cold	bar (MPa)	1.0 (0.1)	1.0 (0.1)	1.0 (0.1)
System pressure relief valve setting	bar (MPa)	3.0 (0.3)	3.0 (0.3)	3.0 (0.3)
Expansion vessel size	litres	8.0	8.0	8.0
Expansion vessel charge pressure	bar (MPa)	1.0 (0.1)	1.0 (0.1)	1.0 (0.1)
Electrical power consumption - Max.	Watts	80	105	120
Electrical power consumption - Standby	Watts	2	2	2
Maximum temperature of combustion products	°C	75	75	75
Maximum flue overheating temperature	°C	120	120	120
Ambient operating temperature	°C	-5 to +50	-5 to +50	-5 to +50
Category		II 2H3P	II 2H3P	II 2H3P
Type of installation		C13, C33, C43, C53, C63, C83, C93		

3.2 TECHNICAL PERFORMANCE DATA - LPG - PROPANE GAS (Cat I3P 3P - G31 37 mbar)

		E-Tec Plus 28	E-Tec Plus 33	E-Tec Plus 38
Heat input gross - DHW	kW	31.3	35.4	42.4
Heat input gross - CH	kW	26.7	31.1	35.5
Heat input minimum gross	kW	4.9	5.5	6.8
Gas supply pressure	mbar	37	37	37
Gas burner injector	mm	3.80	4.30	4.90
CO2 at maximum CH output	%	11.4	11.2	10.85
CO2 at maximum DHW output	%	11.4 (+0.1/-0.3)	11.2 (+0.2/-0.4)	10.9 (+0.4/-0.2%)
CO2 at minimum output	%	10.6 (+0.3/-0.1)	10.0 (+0.4/-0.2)	9.9 (+0.4/-0.2%)
Gas rate at maximum output	kg/h (g/s)	2.24 (0.62)	2.53 (0.70)	3.03 (0.84)

Note: OtherTechnical data is the same as NG data.

3.3 FLUE LENGTHS

A 500 mm or 1000 mm Easy-Flue terminal kit with 90° bend or horizontal terminal is available.

CD 750 mm and 1000 mm flue extensions are available.

Length of Flue Required:-

Rear Flue = wall thickness + 180 mm (includes terminal).

Side Flue = wall thickness + distance between wall and side of boiler + 265 mm (includes terminal).

Vertical Flue = distance from top of boiler side panel to required roof position minus 1000 mm for vertical terminal assembly.

Maximum horizontal flue length = 12 m.

Maximum vertical flue length including terminal is 14 m.

Each additional CD 90° Bend is equivalent to 1.3 m of flue length.

Each CD 45° Bend is equivalent to 0.9 m of flue length.

The CD Vertical Flue terminal assembly is equivalent to 1 m of flue length.

3.4 PUMP

Both pump with UPM3 electronics and pump with LED and UPM3 W3 (Wave 3) electronics and UPM4 electronics

The boiler is equipped with a variable speed low power consumption pump.

During the DHW mode, the pump always runs at the maximum speed.

During the CH mode, three different functioning modes of the pump are available, Proportional, Fixed and Constant ΔT.

Proportional - The pump speed is controlled automatically in order to give a proportional pump head, the pump speed varies based on the heat output supplied by the burner - the greater the heat output the higher the pump speed. See parameter A3 in Section 6.13.
It is possible to adjust the pump speed range in the boiler parameter menu.

Fixed - The pump runs at a constant speed by setting the same minimum and maximum speeds. See parameters A1 and A2 in Section 6.13.

Constant - The pump speed is controlled to give a set ΔT. See parameter A3 in Section 6.13.
The boiler is factory set to Constant - to achieve a ΔT of 15°C (parameter A3 is set to 15)

By-pass Regulation - The boiler leaves the factory with the by-pass open.

If necessary, the by-pass can be adjusted to the system requirements from maximum (by-pass open) to minimum (by-pass closed). Adjust using a flat head screwdriver, turn anticlockwise to close the by-pass, and clockwise to open.

With the by-pass in the closed position the system must have a continuous open circuit.

If zone valves are used in the system an external by-pass must be fitted.

Pump with LED and UPM3 W3 (Wave 3) electronics ONLY

When the pump is running, the LED lights with a steady green light.
When the pump switches on, the green LED flashes at a higher intensity and then returns to normal intensity with a steady green light.
If the pump detects an alarm, the LED switches from green to red which can mean one of the following:
a - Low supply voltage.
b - Seized rotor.
c - Electrical fault.

To see in detail the meaning of the red LED, please refer to the end of Section 10.2 under pump fault.

The LED in addition to being green or red, can also remain off. It is normal for the LED to be off when the pump is not running whereas with the pump running the LED must be lit, if it is not it means there is a fault.

Pump with UPM4 electronics ONLY

When the pump is running, the symbol flashes with green light.

When the pump power supply on, the symbol is steady with green light.

If the pump detects an alarm, the symbol ⚠ is steady with red light.

3.5.1 E-Tec Plus 28 Available Pump Head and Power Consumption

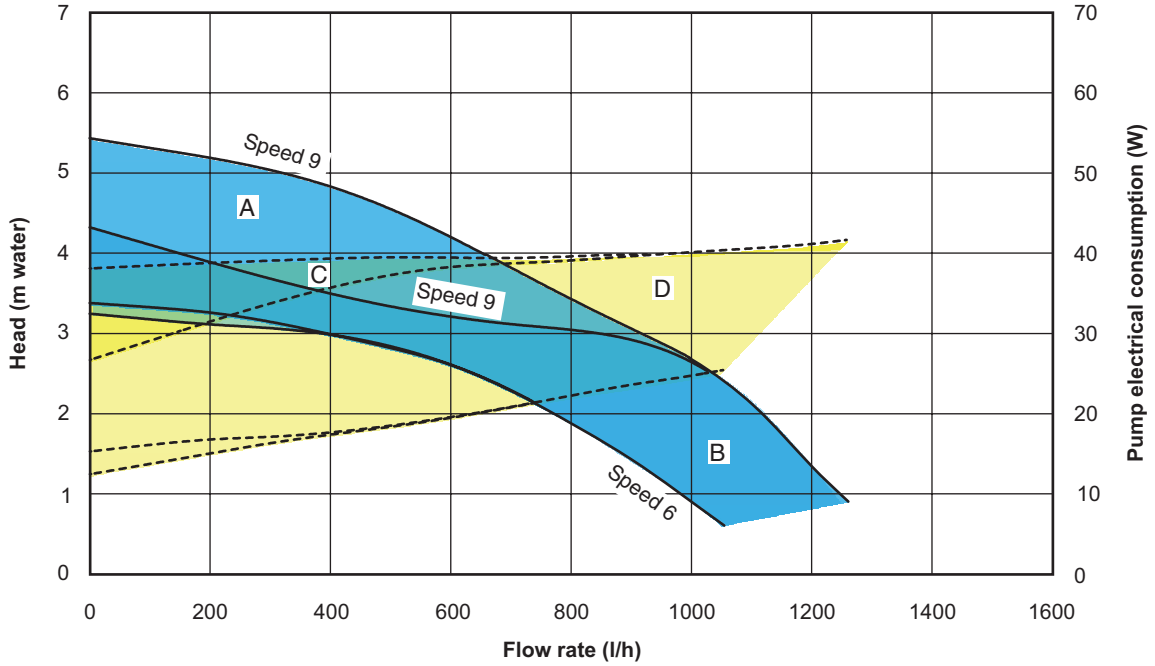

A+B = Head available with by-pass closed
B = Head available with by-pass open
C+D = Power consumed by the pump with by-pass open (dotted area)
D = Power consumed by the pump with by-pass closed (dotted area)

Fig. 3.1

3.5.2 E-Tec Plus 33 Available Pump Head and Power Consumption

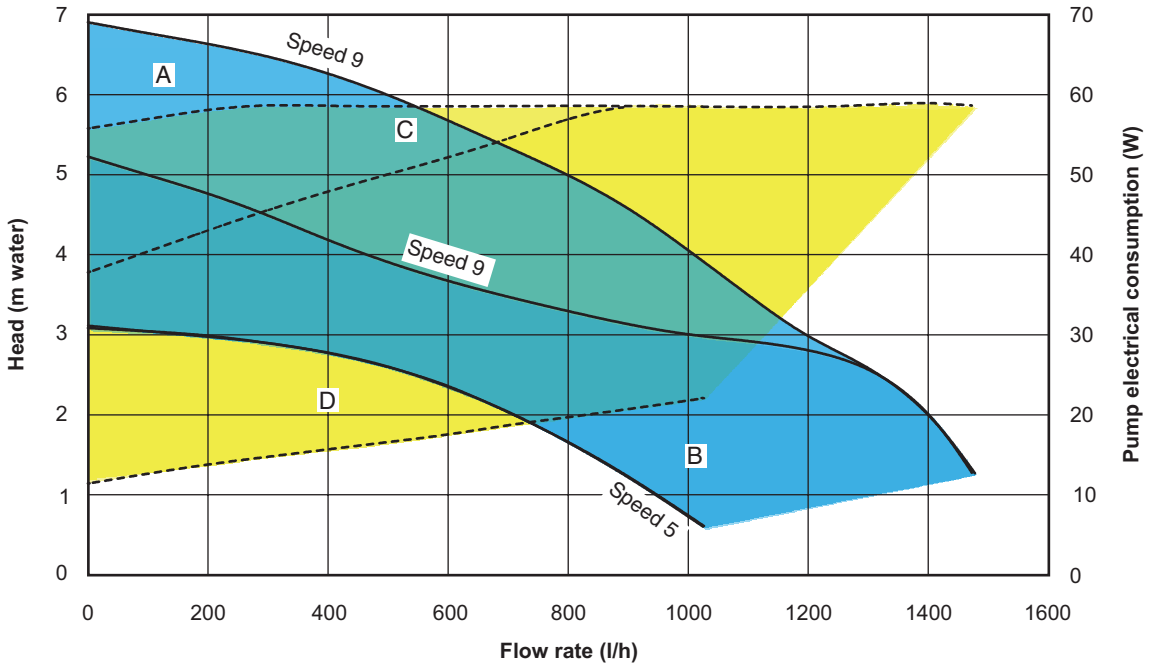

A+B = Head available with by-pass closed
B = Head available with by-pass open
C+D = Power consumed by the pump with by-pass open (dotted area)
D = Power consumed by the pump with by-pass closed (dotted area)

Fig. 3.2

3.5.3 E-Tec Plus 38 Available Pump Head and Power Consumption

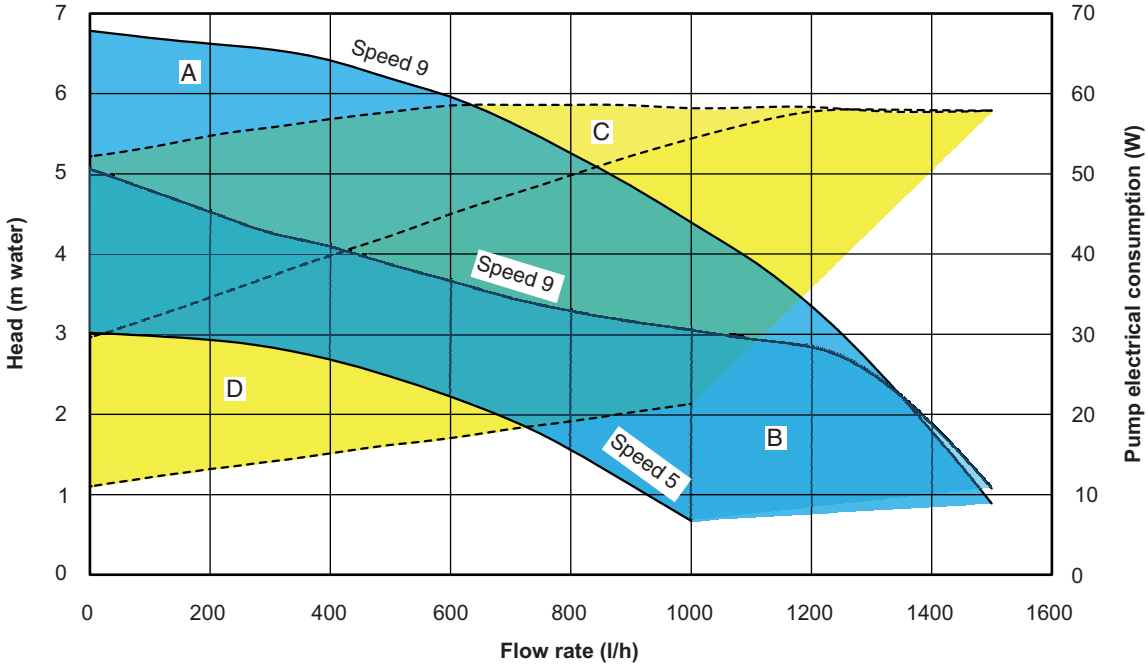

A+B = Head available with by-pass closed
B = Head available with by-pass open
C+D = Power consumed by the pump with by-pass open (dotted area)
D = Power consumed by the pump with by-pass closed (dotted area)

Fig. 3.3

3.6 ELECTRICAL CONNECTIONS

Note: This Appliance Must Be Earthed

Optional integral single channel controls are available if required.

Note: Only use the Alpha single channel controls. **Do not fit any two channel controls.**

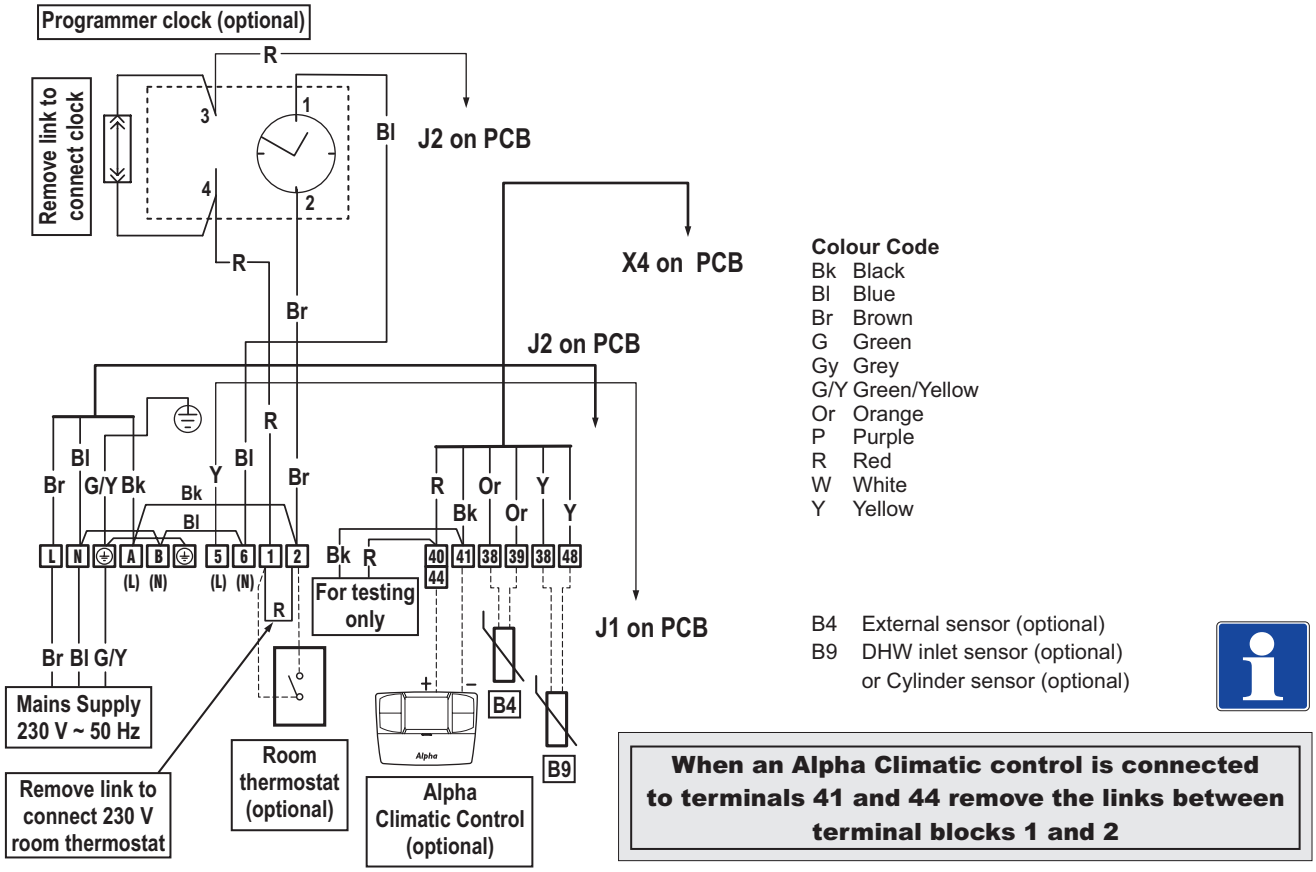

Colour Code

Bk	Black
Bl	Blue
Br	Brown
G	Green
Gy	Grey
G/Y	Green/Yellow
Or	Orange
P	Purple
R	Red
W	White
Y	Yellow

B4 External sensor (optional)
B9 DHW inlet sensor (optional) or Cylinder sensor (optional)

When an Alpha Climatic control is connected to terminals 41 and 44 remove the links between terminal blocks 1 and 2

Fig. 3.4

3.7 DATA BADGE ANNOTATION

NOTE: Technical data is provided on the boiler data label and in Section 3.1.

Md		Cod. Md	
Sr N°		Cod. PIN	
Type			
Qnw/Qn min.	Qnw/Qn max.	Pn min.	Pn max.
PMS	PMW	D	TM
NOx Class			
			CONDENSING

Md.....Model
Cod. Md .....Model code
Sr N° .....Serial number
CHK.....Check
Cod. PIN .....PIN code
Type.....Type of installation (ref. CEN TR 1749)
Qnw min. .....DHW minimum heat input
Qn min. .....CH minimum heat input
Qnw max. .....DHW maximum heat input
Qn max. .....CH maximum heat input
Pn min. .....Minimum heat output
Pn max.....Maximum heat output
PMS.....Maximum system pressure
PMW.....Maximum DHW pressure
D.....Specific flow rate
TM .....Maximum operating temperature
NOx Class.....NOx Class
CONDENSING .....Condensing boiler

3.8 BOILER SCHEMATIC

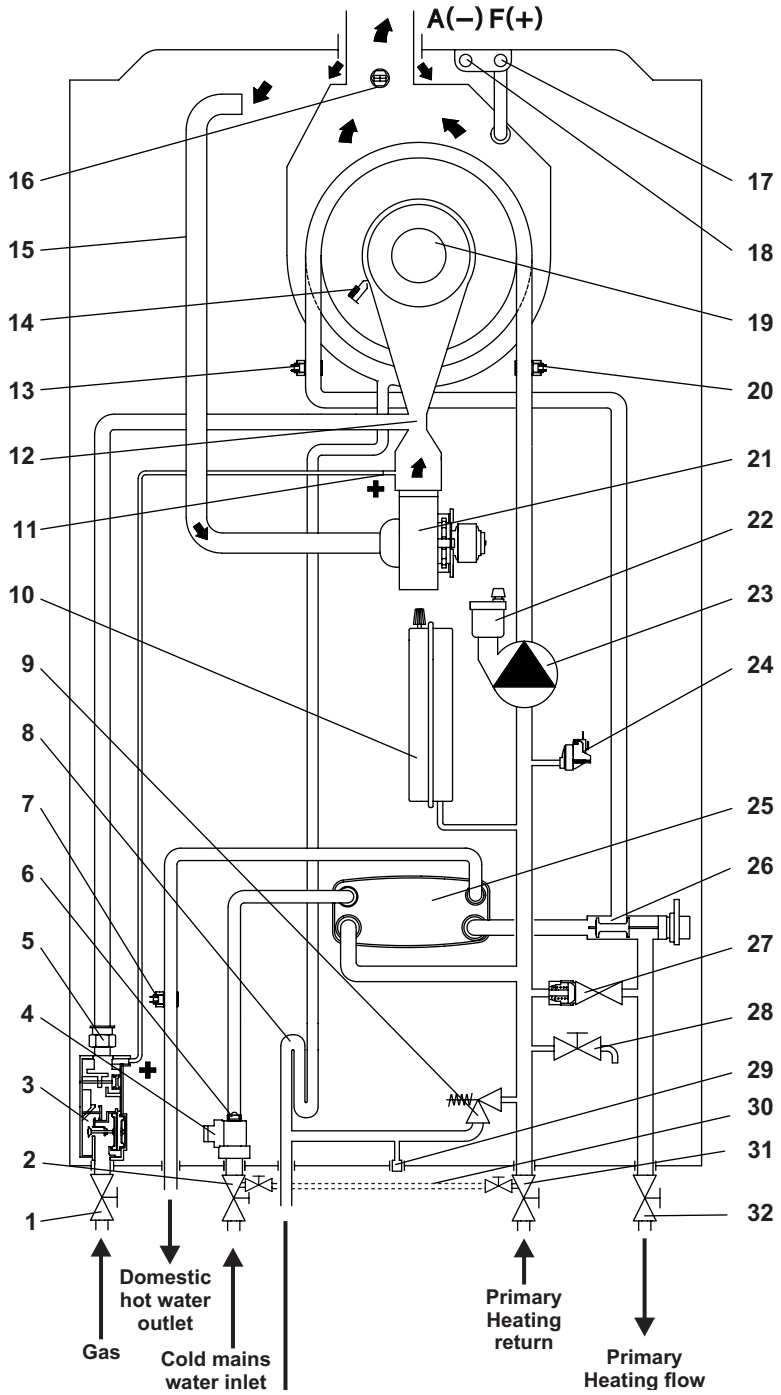

1	Gas isolation valve	11	Venturi positive pressure point (+)	22	Automatic air vent
2	Cold mains isolation valve with integrated filling valve	12	Venturi	23	Boiler pump
3	Gas valve	13	Primary flow temperature sensor	24	Primary pressure switch
4	DHW flow switch	14	Ignition/sensing electrode	25	DHW heat exchanger
5	Gas injector	15	Air supply pipe	26	Diverter valve
6	Flow regulator	16	Flue temperature sensor	27	By-pass
7	DHW temperature sensor	17	Flue test point (pressure point +)	28	Drain point
8	Condensate trap	18	Air test point (pressure point -)	29	Safety valve indicator
9	3 bar safety valve	19	Burner	30	Filling loop
10	Expansion vessel	20	Primary return sensor	31	Heating return isolation valve with integrated filling valve
		21	Fan	32	Heating flow isolation valve

Fig. 3.5

4 GENERAL BOILER INFORMATION

4.1 GAS SUPPLY

The meter and supply pipes must be capable of delivering the required quantity of gas in addition to the demand from any other appliances connected to the same gas supply.

Refer to Technical performance data in Section 3.1 and 3.2.

The complete installation, including the meter, must be tested for gas tightness and purged as described in BS 6891.

4.2 AIR SUPPLY

The boiler does not require any air vents for cooling in the room in which it is installed or when installed in a cupboard or compartment. The minimum clearances for servicing must always be maintained.

Note: A cupboard or compartment used to enclose the boiler must be designed and constructed specifically for the purpose, i.e. comply with the Building Regulations.

4.3 FLUE SYSTEM - Figs. 4.1, 4.2

The flue system must be installed in accordance with BS 5440:1.

When using a horizontal flue kit ensure that the flue outer duct is installed horizontally (please note that the flue inner duct already has a pre-determined slope towards the boiler for condensate to run back towards the boiler).

When additional flue extensions are used, ensure the flue slopes downwards towards the boiler by a minimum of 30 mm per metre of flue. For extended flue runs a fall of 50 mm per metre is recommended.

Horizontal and vertical flue assemblies should be supported every metre with access provided to the joints.

All joints between flue sections should be connected using the clamps provided. It is not required to add additional screws through the clamps and into the flue sections.

Additional flue components are available as follows:-

CD EasyFlue 500 mm telescopic terminal - Part No. 6.12000510.

CD EasyFlue 1000 mm telescopic terminal - Part No. 6.12001010.

CD 750 mm flue extension - Part No. 6.2000750.

CD 1000 mm flue extension - Part No. 6.2001050.

CD 100 mm flue support brackets (pack of 5) - Part No. 6.1000355.

CD 90° bend - Part No. 6.2000590.

CD 45° bend - Part No. 6.2000545.

CD Vertical flue terminal kit - Part No. 6.2000520. Refer to the separate installation instructions supplied with the kit.

Flue support brackets - Part No. 6.1000355.

Terminal guard - Part No. 6.2000570.

Additional flue accessories and plume management are also available.

Note:

1. If an extra 90° bend is used, this reduces the maximum flue length by 1.3 m. Each 45° bend used reduces the maximum flue length by 0.9 m.
2. Under no circumstances must the flue length (including allowances for extra bends) exceed 12 metres horizontally and only 14 metres vertically.
3. Failure to use Alpha flue components with the boiler will invalidate the boilers CE approval, guarantee and may be unsafe.

HORIZONTAL FLUE OPTIONS - Lmax - 12 metres

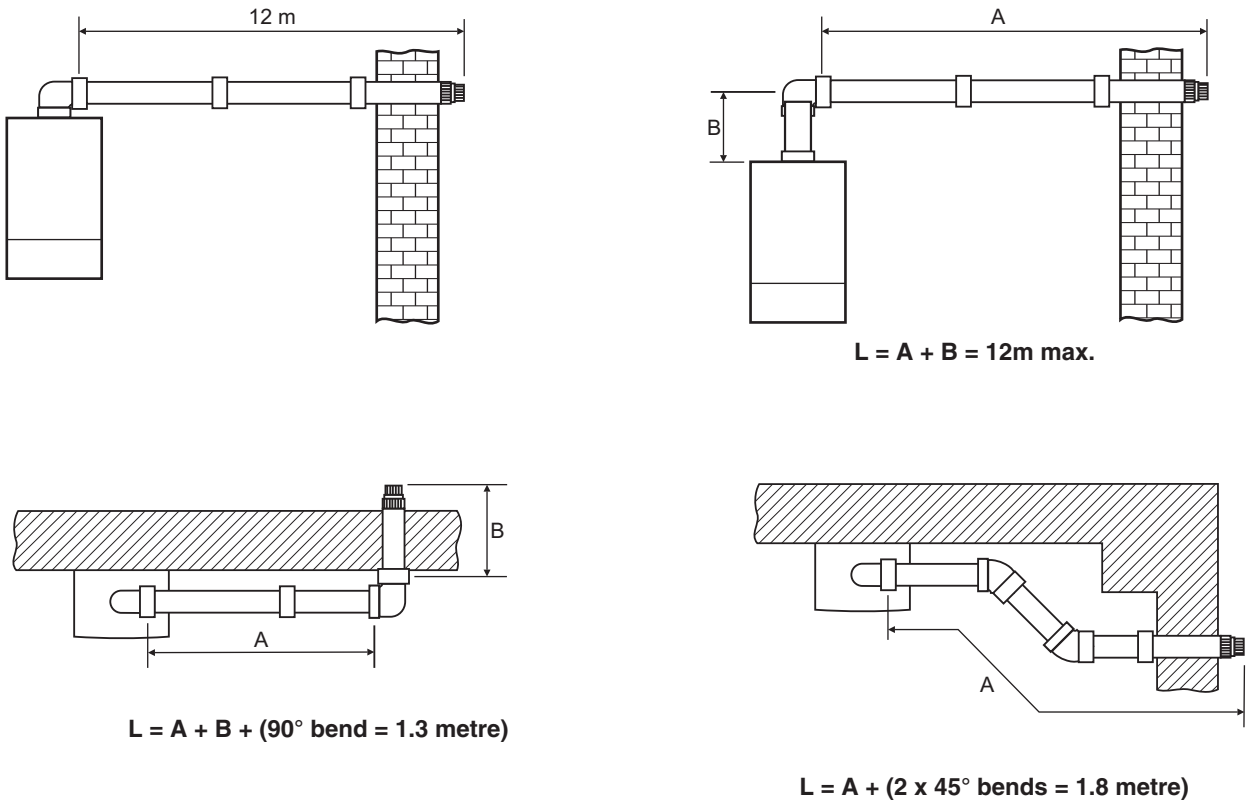

Fig. 4.1

VERTICAL FLUE OPTIONS

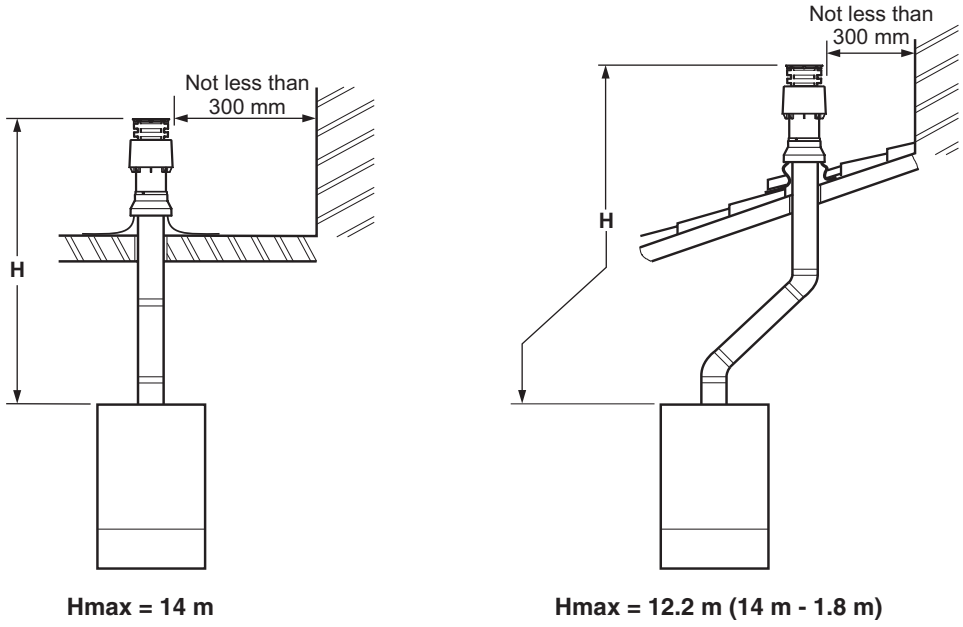

Fig. 4.2

4.4 FLUE TERMINAL LOCATION - Figs. 4.3 and 4.4

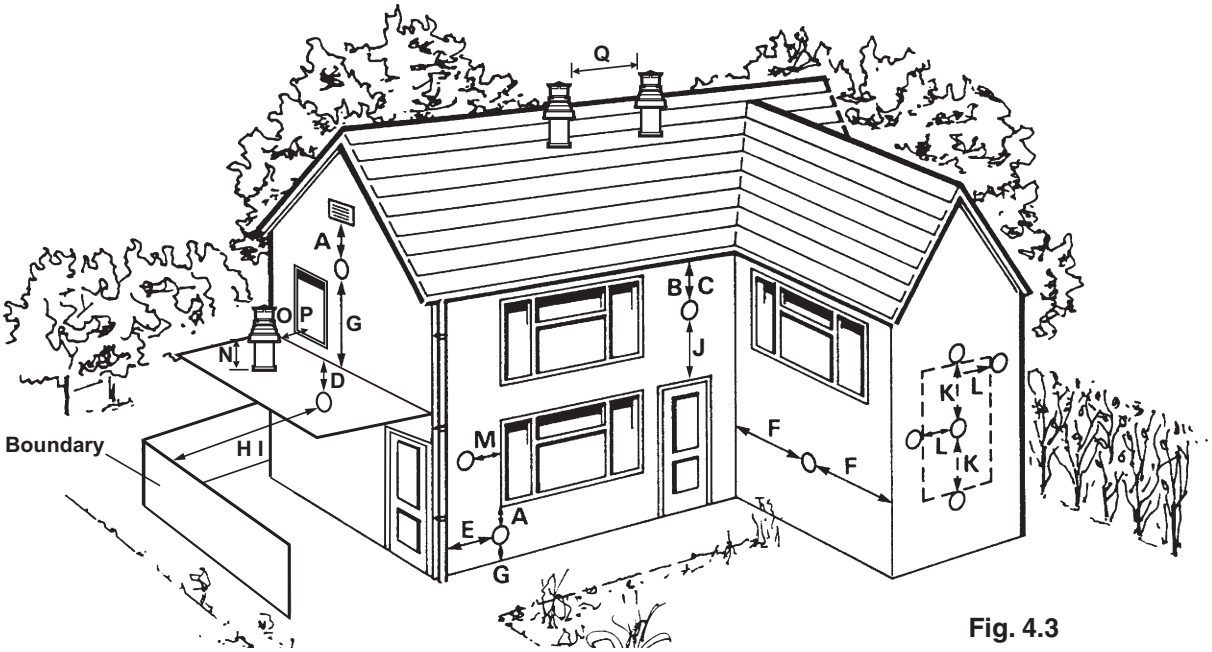

Fig. 4.3

	Terminal position	Min. distance (mm)
A	Directly below an opening, air brick, windows, etc.	300 (See Note 1)
B	Below gutters, soil pipes or drain pipes	75 (See Note 3)
C	Below eaves	200 (See Note 3)
D	Below balconies	200 (See Note 3)
E	From a vertical drain pipe or soil pipe	150 (See Note 3)
F	From an internal or external corner	300 (See Note 2)
G	Above ground, roof or balcony level	300 (See Note 9)
H	From a surface or boundary facing the terminal	600 (See Note 4)
I	From a terminal facing the terminal	1200 mm
J	Above an opening, air brick, window etc.	300 (See Note 1)
K	Vertically from a terminal on the same wall	1500 mm
L	Horizontally from a terminal on the same wall	300 mm
M	Horizontally from an opening, air brick, window etc.	300 mm (See Note 1)
N	Minimum protrusion through a roof	300 mm
O	From a vertical obstruction	300 mm
P	From an openable window	600 mm
Q	From an adjacent vertical terminal	600 mm

Notes:

1. In addition, the terminal should not be nearer than 150 mm to the framework of an opening into the building, i.e. a window surround or door surround.
2. This clearance may be reduced to 25 mm without effecting the performance of the boiler. However, to ensure the condensate plume does not affect adjacent surfaces a clearance of 300 mm is preferable.
3. These clearances may be reduced to 25 mm without effecting the performance of the boiler. However, to ensure the condensate plume does not affect adjacent surfaces the terminal can be extended beyond gutters, pipes, eaves, balconies etc. by upto 500 mm. If the flue is extended more than 500 mm outside, it should be boxed and insulated.
4. To reduce the possibility of nuisance to neighbouring buildings etc. it is recommended the terminal should not be less than 2500 mm from car parking spaces, building boundary walls, fences etc.
5. A terminal must not be sited under a car port roof.
6. In certain weather conditions the terminal will emit a plume of steam. If possible avoid positioning the terminal where this may cause a nuisance, i.e. positions A, D, G, H, J or M.
7. The flue terminal must be exposed to the external air and the position must allow the free passage of air across it at all times.
8. The flue terminal must be positioned where products of combustion will freely disperse and not cause a nuisance.
9. Where a terminal is sited below 2 m from the ground or floor level, the terminal must be protected by a terminal guard. In these situations, consideration should also be given to prevent nuisance plume and fumes in areas such as access routes, passageways, patios, balconies etc.

Proximity of flue duct outlets to boundaries

The flue duct shall be sited so that it is at least 600 mm (see Fig. 4.4) from the boundary line when facing it and at least 300 mm from the boundary line when running parallel to it.

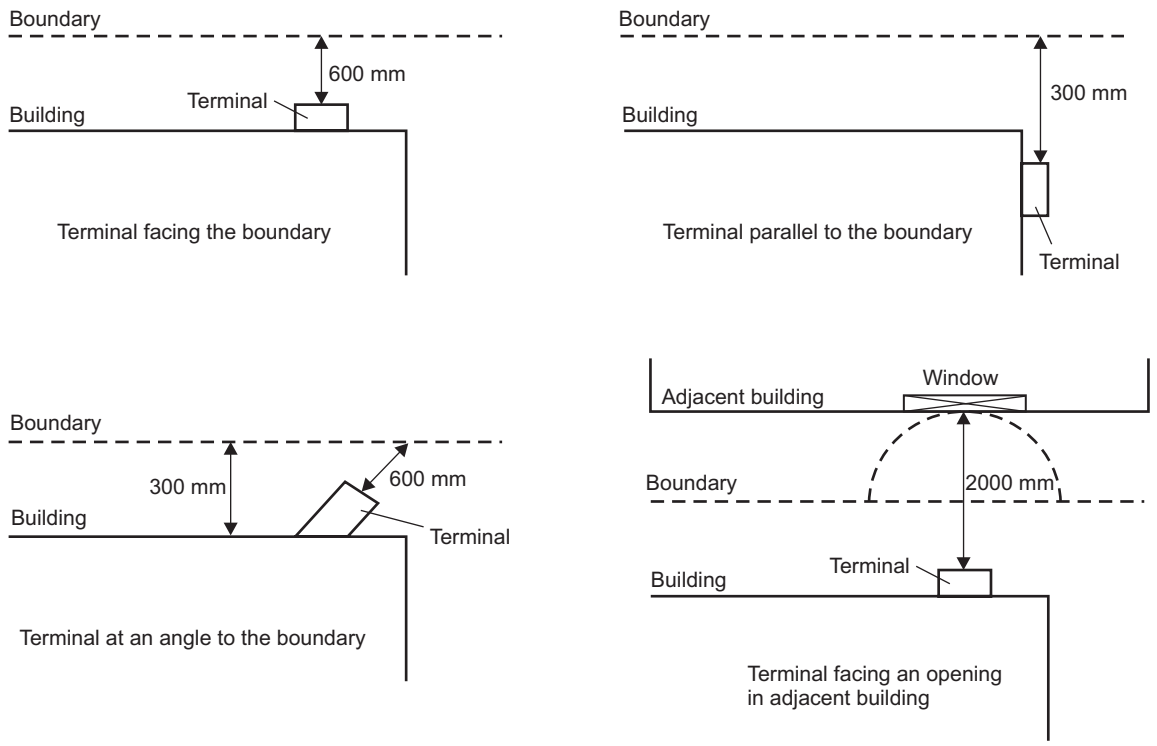

Fig. 4.4

4.5 BOILER LOCATION

The boiler is not suitable for external installation unless it is installed within a purpose designed weatherproof building.

The boiler must be installed on a flat vertical wall which is capable of supporting the weight of the boiler. The boiler cannot be fitted to or adjacent to a wall comprising of a combustible material without the use of a special thermal insulation barrier.

If the boiler is to be fitted in a timber framed building, it should be fitted in accordance with the Institute of Gas Engineers 'Guide for Gas Installations in Timber Frame Housing', reference IGE/UP/7.

The boiler may be installed in any room or internal space, although particular attention is drawn to the requirements of the current IEE Wiring (BS 7671) Regulations, and in Scotland, the electrical provisions of the Building Regulations applicable in Scotland, with respect to the installation of the boiler in a room or internal space containing a bath or shower. Where a room-sealed boiler is installed in a room containing a bath or shower, it must not be possible for a person using the bath or shower to touch any electrical switch or boiler control utilising mains electricity.

The boiler may be installed in a cupboard or compartment, provided it is correctly designed for that purpose, i.e. complies with the Building Regulations and the requirements of BS 6798.

4.6 CENTRAL HEATING SYSTEM - Fig. 4.5

The boiler is designed for use in a sealed central heating system in accordance with the requirements of BS EN 12828 and BS 6798.

The system should be designed to operate with flow temperatures of up to 90°C. When designing the system, the pump head, expansion vessel size, mean radiator temperature, etc. must all be taken into account. Refer to the pump performance table for guidelines.

System volume - The expansion vessel incorporated into the boiler is suitable for a sealed heating system with a maximum water content of 80 litres (18 gal). Above 80 litres, consideration should be given to fitting an additional expansion vessel fitted in the position shown in Fig. 4.5. To check correct operation of the expansion vessel(s) the system pressure should not be more than 2.5 bar when the system is at maximum operating temperature (for further guidance refer to BS 7074:1).

The boiler is supplied with the following components built in:-

Pressure gauge - To indicate the system pressure to be maintained.

Expansion vessel - Conforming to EN 13831 with a capacity of 8 litres and pre-charged with air to a pressure of 1.0 bar.

By-pass - The boiler incorporates an automatic by-pass, therefore an automatic by-pass is not required for the system unless separate zone valves have been installed.

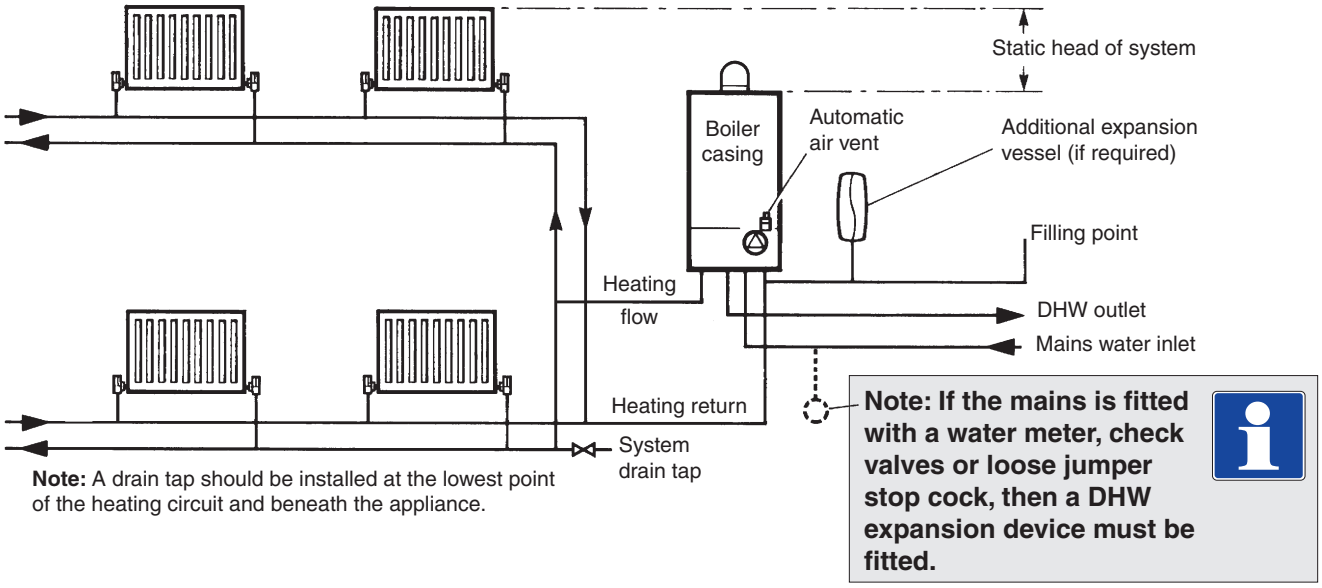

Fig. 4.5

4.7 FILLING THE CENTRAL HEATING SYSTEM - Fig. 4.6

The system design pressure (cold) should be set to 1.0 bar. This pressure is equivalent to a static head (see Fig. 4.5) of 10.2 metres of water.

The E-Tec Plus models have an integrated filling loop provided with the boiler connection group.

Fill the system using the two small black control valves opening one first and using the second to control the flow into the system.

When the system is filled and vented to the correct pressure close both control valve taps. The temporary connection can then be undone and slid back to disconnect the loop.

Drain valves (to BS 2879) must be fitted in the heating system to allow the system to be fully drained.

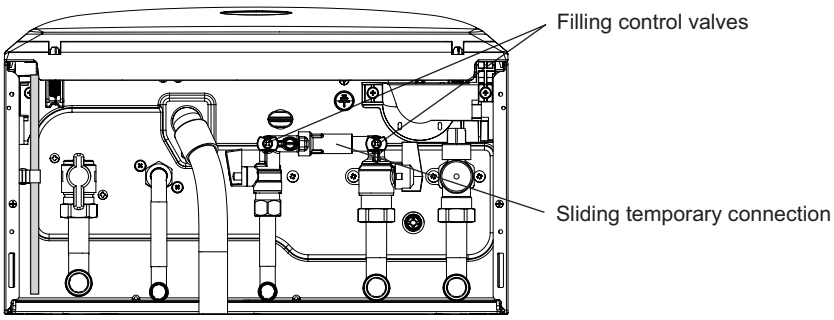

Fig. 4.6

4.8 FLUSHING THE HEATING SYSTEM

It is essential that the central heating system is thoroughly cleaned and flushed before fitting an Alpha E-Tec Plus boiler. Failure to do so will invalidate the warranty. The primary condensing heat exchanger is constructed in stainless steel and therefore is compatible with most materials used in a heating system.

Where possible, the heating system should be cleaned before installing the boiler. A proprietary cleaner should be used following the product manufacturers' instructions. After installation the system should then be filled and flushed before final filling. A corrosion inhibitor approved by Alpha must be added to ensure that the heating system operates effectively and efficiently, it is important to maintain the correct level of corrosion inhibition at all times.

The corrosion inhibitor should be checked annually at the time of the boiler service, and topped up if necessary. A further dose of corrosion inhibitor should be added to the system every five years.

It is important to ensure that the correct level of inhibitor has been added, and that any cleaner residues have been adequately removed to maintain the operation of the boiler and heating system. Failure to correctly clean and treat the system will invalidate the boiler warranty.

If it is not possible to clean the system before fitting the new boiler, the system should be cleaned using a proprietary cleaner and a magnetic filter connected in the return before the boiler as this is the most effective method of ensuring that any magnetite and rust particles are prevented from entering and damaging the boiler.

Once the system condition has been restored, an effective magnetic filter and strainer should be fitted permanently to the system as a method of collecting any magnetite and rust from the system during operation.

4.9 DISPOSAL OF CONDENSATE

Provision must be made for the safe disposal of condensate produced by the flue gases of the Alpha boilers and reference should be made to BS 6798 for the requirements on the disposal of condensate.

The boilers incorporate a condensate trap which has a seal of greater than 75 mm, therefore no additional trap is required.

The condensate should ideally be discharged internally into an internal waste pipe (washing machine/sink waste) or soil pipe to avoid the possible risk of freezing. The pipework must be in 22 mm pipe (minimum).

External pipe runs should be avoided, but if it is necessary, the pipework should be protected from the risk of freezing with waterproof insulation and the length should be kept to a maximum of 3 m and the condensate pipework should be increased to a minimum of 32 mm diameter. Termination should be into an external gulley or soakaway as shown in Figs. 4.7 and 4.8.

Note: All pipework must have a continuous fall (see Figs. 4.7 and 4.8) from the boiler and must be of an acid resistant material such as plastic waste pipe. (copper or steel is not suitable).

The condensate pipe is combined with the expansion relief discharge. The flexible condensate hose supplied meets the requirements for use with both condensate and expansion relief. This should be connected to a suitable waste pipe and fittings with approval for hot and cold water, i.e. BS EN1451-1PP Waste piping, BS EN1455-1 ABS piping or BS EN 1566-1 MUPVC piping.

The condensate and discharge should be connected to a drain for sewage and foul waste or a dedicated soak away with neutraliser added.

It should be noted that the connection of a condensate pipe to a drain may be subject to local building control requirements.

If the condensate is connected to a gutter or drain down pipe where there is a risk of water blocking and rising back towards the boiler, a suitable air gap / tundish must be fitted to the condensate pipe.

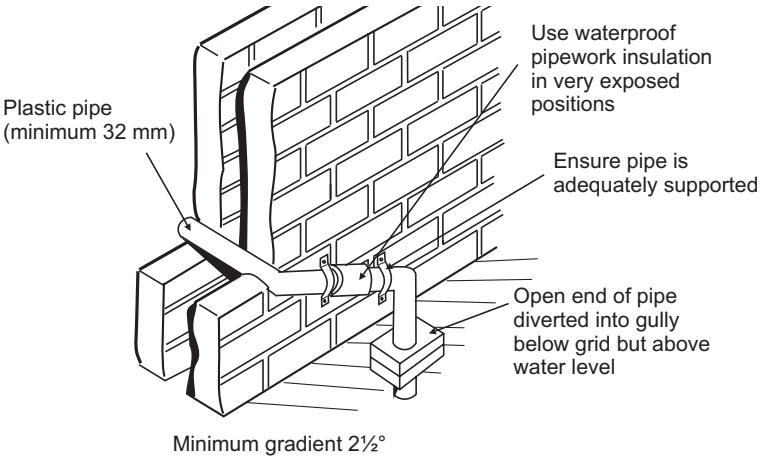

Fig. 4.7 - External gully

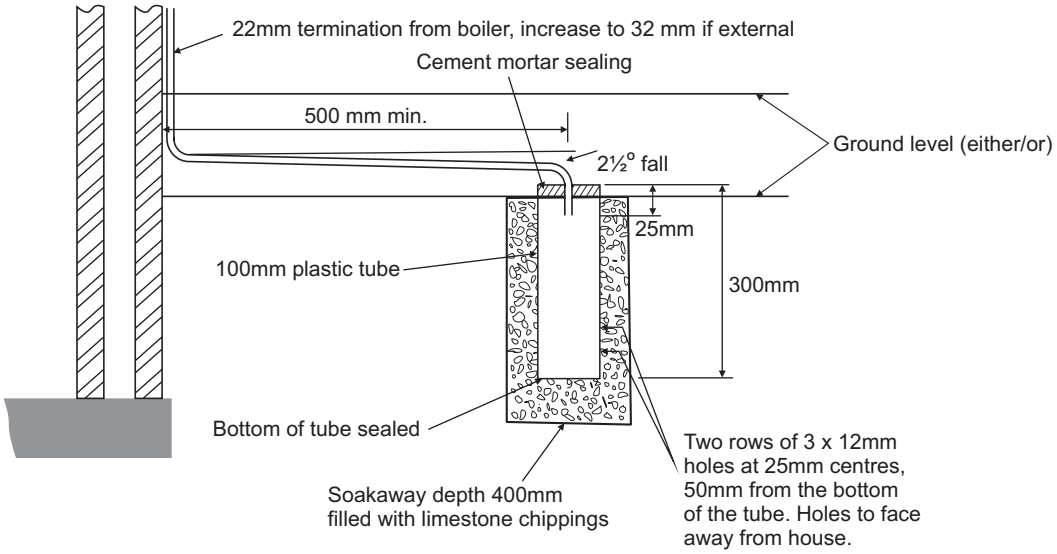

Fig. 4.8 - External soakaway

5 INSTALLATION

5.1 UNPACKING

1. The boiler carton also contains the following:-
   - Connection kit (union bends, washers and valves)
   - Mounting bracket plus screws and wall plugs
   - Condensate discharge pipe
   - Literature pack and Wall template

A suitable Alpha flue system must be selected to use with the boiler.

Notes: a. All flues must be suitable for Alpha condensing boilers.
b. CD 750 mm and 1000 mm flue extensions are available, if required.

Damaged products must not be used.

2. Unpack boiler and remove the loose items, packs and mounting bracket.

   Note: The boiler can be stood in an upright position (only while the valves and union bends are not fitted).

It is recommended that two persons lift the boiler.

4.2 CLEARANCES REQUIRED - Fig. 5.1

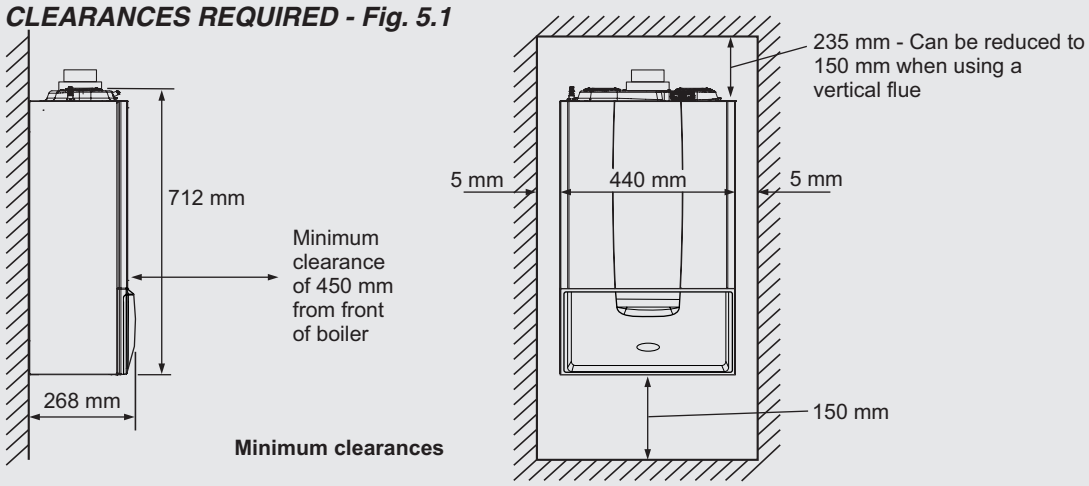

Fig. 5.1

5.3 PREPARE THE WALL - Fig. 5.2

1. Decide upon the position of the boiler taking into account the clearances required for servicing and the flue terminal position.
2. Tape the template to the wall (ensure it is level and the right way up) and mark the position of the holes for the boiler mounting bracket. If rear exit flue is used, mark the position of the hole for the flue.
3. **Side exit flue -** Continue the horizontal centre line of the flue across the wall to the side wall, then along the side wall 135 mm (ensure the lines are horizontal). This will give the position of the centre of the hole for the flue.
4. Cut the 110 mm diameter hole (or use a 107 mm core drill) in the wall for the flue.

   Notes: 1. Ensure the hole is horizontal.
   2. For internal fitting of the flue, using the flue sealing collar supplied, cut a 130 mm dia. flue hole using a 127 mm core drill.
5. Drill the fixing holes (10 mm dia.) to accept the No.10 plugs supplied. Using the screws supplied, fit the mounting bracket.

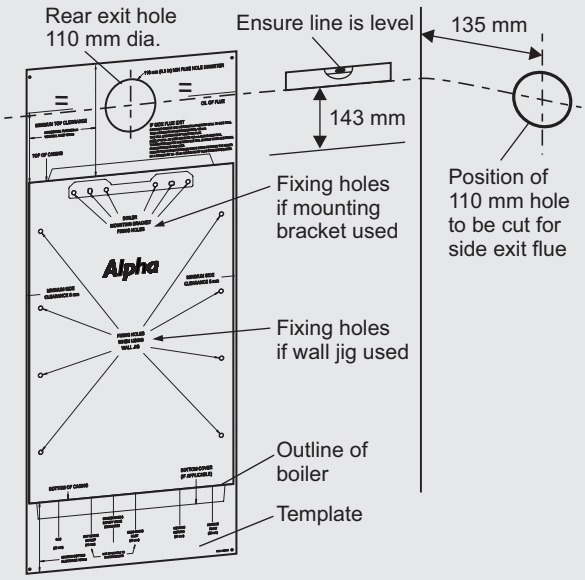

Fig. 5.2

5.4 FIT THE BOILER - Refer to Figs. 5.2 and 5.3

Lift the boiler and locate it on the mounting bracket - the boiler should be lifted by **two** persons.

Note: When handling or lifting always use safe techniques - keep your back straight, bend your knees, don't twist - move your feet, avoid bending forwards and sideways and keep the load as close to your body as possible.
Where possible transport the boiler using a sack truck or other suitable trolley.
Always grip the boiler firmly, and before lifting feel where the weight is concentrated to establish the centre of gravity, repositioning yourself as necessary.

Appropriate personal protective equipment should be worn.

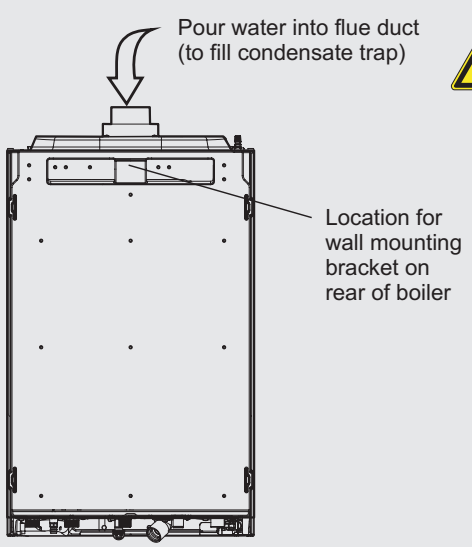

Fig. 5.3 - rear of boiler

5.5 CONNECT THE PIPEWORK - Fig. 5.4

1. Thoroughly flush out all the water pipework. Refer to Section 3.9.
2. Fit the valves to the boiler connections as shown in Fig. 5.4 - note the colours of the operating levers.
3. Connect the system pipework to the union fittings on the valves just fitted.

   Note: When soldering bends, ensure they are not connected to the valves, otherwise the internal seals may be damaged.

   One metre of copper pipe must be fitted to the boiler before connecting to any plastic pipework conforming to BS 7291.
4. Connect the flexible condensate pipe to the rubber connector as shown in Fig. 5.4. Using the adaptor supplied, connect the flexible pipe to the condensate drain.
   Ensure that the condensate discharge pipe is as required in Section 4.9.
5. Ensure that all the valves are closed (operating lever at right angle to valve) and do not turn on the water or gas supplies at this stage.

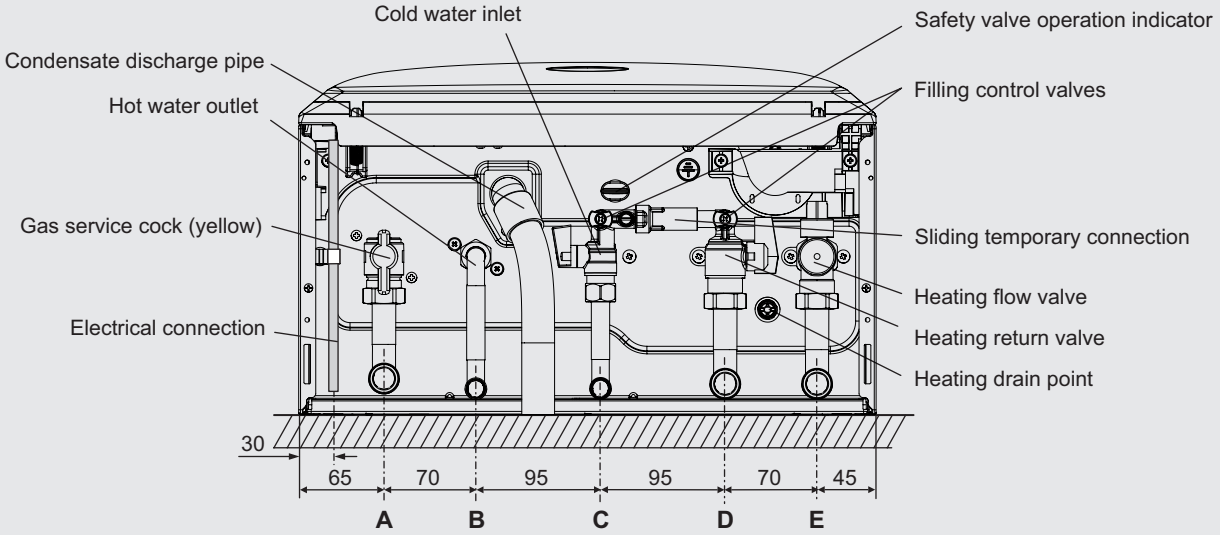

A - Gas inlet - (22 mm)
B - DHW outlet elbow - (15 mm)
C - Cold water mains inlet - (15 mm)
D - Heating return - (22 mm)
E - Heating flow - (22 mm)

Fig. 5.4

5.6 FIT THE FLUE - Figs. 5.5 and 5.6

The following procedure applies to fitting an Alpha CD Easy-Flue to both rear or side exit flue - horizontally only.

1. The CD Easy-Flues are suitable for use in the flue length ranges shown in the tables below.
   Note: Where the length is less than the minimum or more than the maximum, refer to Section 5.7.

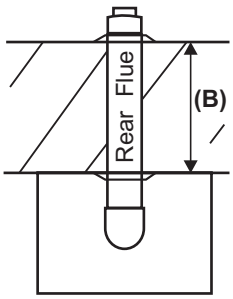

CD Easy-Flue	B (mm)	
	Max	Min
500 mm	530	305
1000 mm	975	765

Note: Add 45 mm to dimension B if the wall jig is used.

Fig. 5.5

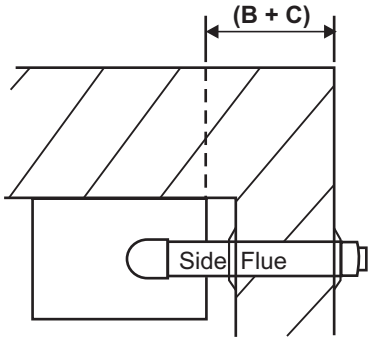

CD Easy-Flue	B + C (mm)	
	Max	Min
500 mm	440	215
1000 mm	885	675

Fig. 5.6

2. Determine the overall length (L) of flue required, (see Fig. 5.7) as follows:-

   Rear flue L = wall thickness (B) + 60 mm (105 mm if the wall jig is used)

   Side flue L = wall thickness (B) + distance between boiler and wall (C) + 145 mm

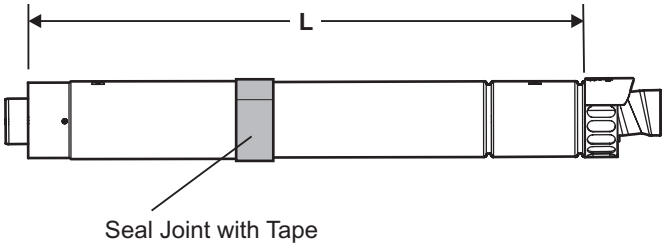

Fig. 5.7

3. Adjust the telescopic section of the flue to the distance 'L', ensuring that the two labels marked 'TOP' are aligned, then seal and secure the joint between the ducts with the sealing tape supplied.
   Note: Always ensure that there is a minimum overlap of 25 mm when fully extending the telescopic section.
4. Pass the flue assembly through the wall (from inside or outside).
   Note: Internal fitting - If there is no access to make good the outside wall, locate the outside (black) flue sealing collar onto the outer duct of the flue immediately before the terminal grille onto the location provided. Push the flue assembly through the 130 mm flue hole, so that the collar completely passes through the wall. Then pull the flue assembly back into the correct position. Visually check that the collar is sealing the outside wall and that it is not restricting any of the openings of the flue terminal.
   Note: Silicone grease or other lubricants must not be used on the flue joints or seals.

   Where a flue terminates less than 150 mm below a gutter, eaves or other obstructions it is possible to extend the flue to allow the flue termination to clear the obstruction, providing the flue is not extended beyond the first joint. For situations below balconies or large eaves where extensions may be required, the flue must be supported using the correct brackets. Alternatively plume management components can be used with supports where necessary.

   All joints between flue sections should be connected using the clamps provided. It is not required to add additional screws through the clamps and into the flue sections.

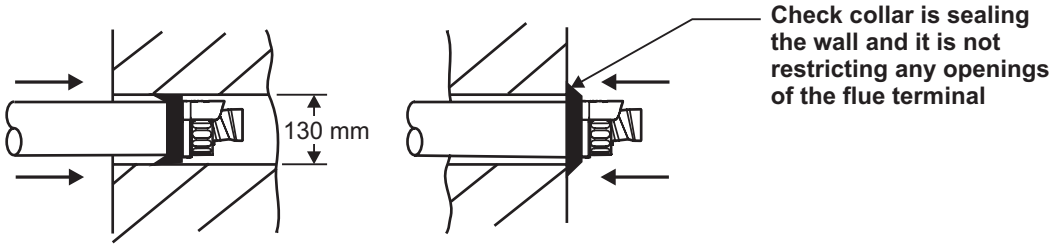

Fig. 5.8 - Fitting the flue from inside

5. Position the smaller Easy-Flue 40 mm clamp (with seal) supplied, over the bend. Fit the bend to the boiler and rotate to the correct position. Secure in position using the clamp. Ensure the clamp is located centrally over both the bend and boiler adaptor.
6. Fit the inside (white) flue sealing collar over the Easy-Flue. If it was not previously fitted, fit the outside (black) flue sealing collar onto the flue immediately before the terminal grille onto the location provided.
7. Slide the larger Easy-Flue 45 mm clamp over the outer duct and pull the flue assembly towards the bend, locating the inner duct into the seal joint on the bend. Ensure the labels marked 'TOP' are positioned at the top before securing the flue assembly to the bend with the clamp (two screws) located centrally over the joint.
   Note: Check the flue terminal protrudes 120 mm out of the wall and the inner duct of the terminal is positioned correctly (see Fig. 5.9).
8. Make good the inside wall by pushing the inside flue sealing collar up to the wall.

   The hole around the flue can be made good using the flue sealing collars supplied or using a suitable sealant/cement if required.

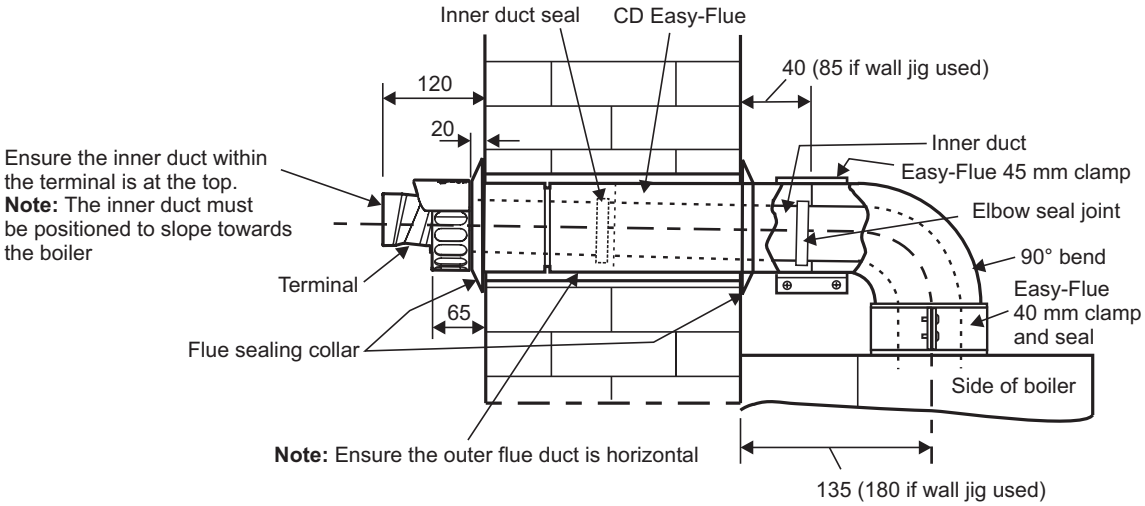

Fig. 5.9 - Rear flue

5.7 REDUCING THE FLUE - Fig. 5.10

When the flue length required is less than the minimum stated in Section 4.5, paragraph 1, refer to Fig. 5.10.

Discard the first telescopic section (**not** the section with the terminal) of the Easy-Flue 1000 mm or 500 mm and cut to the required length.

Note: Ensure that all cuts are square and free from burrs.
Once assembled with the components pushed home, the flue is fully sealed.

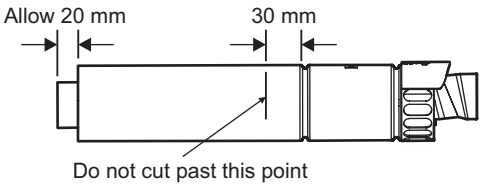

Fig. 5.10

5.8 EXTENDING THE FLUE - Fig. 5.11

Note: The flue assembly length must not exceed the maximum length stated, including the equivalent lengths of any extensions, bends etc. used for plume management components. **E-Tec boilers must not exceed the maximum of an equivalent horizontal flue length of 12 m.**

All joints between flue sections should be connected using the clamps provided. It is not required to add additional screws through the clamps and into the flue sections.

1. When the flue length required is more than the maximum stated in Section 4.6, paragraph 1, refer to the table below and Figs 5.5 and 5.6.

Rear Flue length (B)	Side Flue length (B + C)	Comments
Up to maximum:- 11.890 m (Subtract 45 mm if the wall jig is used)	Up to maximum:- 11.805 m	Alpha CD 750 mm flue extension (Part No. 6.2000750) or 1000 mm extension (Part No. 6.2001050) is required to extend the range of telescopic flue. Refer to Section 4.8 for instructions on how to extend the flue. **Note:** A 130 mm flue hole (127 mm core drill) may be required in the wall. This is when the extended flue is passed through the wall.

Additional support brackets are required when extending the flue. These are available from Alpha, Part No. 6.1000355.

2. Use the template (supplied with the boiler) to mark the required flue position, ensure the slope towards the boiler is correct.
3. Determine the overall flue length as described in Section 5.6, paragraph 2 to determine the number of Alpha CD 750 or 1000 mm flue extensions required.
4. Assemble the flue extensions together by locating the inner duct into the seal joint and secure each extension together with the extension clamps supplied (three screws). Ensure that the clamps are positioned centrally over the joints.
   Note: If it is required to cut an extension, **DO NOT** cut the end of the inner duct that incorporates the seal joint. Ensure the inner duct end without the seal joint is cut so that it is 20 mm longer than the outer duct.
   Ensure that all cuts are square and free from burrs.
   Once assembled with the components pushed home, the flue is fully sealed.
5. Adjust the telescopic section of the Easy-Flue to the required length and secure the Easy-Flue with the sealing tape supplied. Fit the Easy-Flue to the extensions by locating the inner duct into the seal joint and secure with the clamp (three screws), ensuring it is located centrally over the joint.
6. Mark the end of the flue assembly 'TOP' where it is connected to the boiler, so that the 'TOP' of the flue terminal is aligned with the 'TOP' at the boiler end of the flue assembly.
7. Pass the complete flue assembly through the wall.
8. Position the smaller Easy-Flue 40 mm clamp (with seal) supplied, over the bend. Fit the bend to the boiler and rotate to the correct position and secure in position. Ensure the seal is located centrally over both the bend and boiler adaptor. If the inside sealing collar (white) is being used to make good the inside wall, then it will need to be fitted before assembling the flue.
9. Slide the larger Easy-Flue 45 mm clamp (two screws) over the outer duct and pull the flue assembly towards the bend, locating the inner duct into the seal joint on the bend.

   All joints between flue sections should be connected using the clamps provided. It is not required to add additional screws through the clamps and into the flue sections.

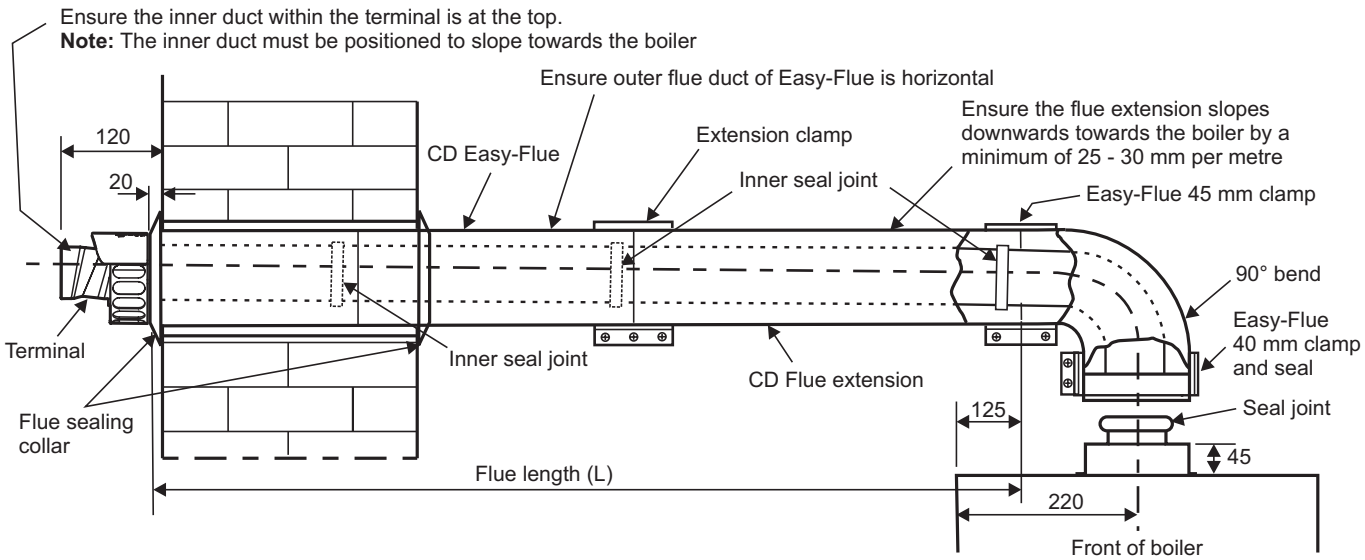

Fig. 5.11 - Side flue

10. Secure the flue assembly to the bend with the clamp ensuring it is positioned centrally over the joint, ensuring the 'TOP' marked on the outer duct is positioned at the top.

    Note: Check the flue terminal protrudes 120 mm out of the wall and that the inner duct of the terminal is positioned correctly, i.e. the inner duct within the terminal is at the top. See Fig. 5.11.

11. Make good the outside wall by fitting the outside sealing collar (black) onto the location provided immediately behind the flue terminal grille. Make good the inside wall using the inside sealing collar (white) if required.

5.9. FIT PLUME MANAGEMENT COMPONENTS - (OPTIONAL)

The following procedures detail the options for management of the exhaust flue gas/plume emitted from the terminal.

a. The terminal supplied with the Easy-Flue can be altered to divert exhaust flue gas/plume at an angle.

   This can be achieved by simply turning the end section of the terminal to the desired angle.

b. The CD Easy-Flue can be converted to allow the inner flue duct to be extended so as to position the terminal in an area where the exhaust flue gas/plume will not cause a nuisance. This can be done before or after installation of the flue, providing there is access to the terminal from outside.

i. Remove the screws (1 in Fig. 5.12) securing the terminal and remove the terminal by pulling it from the flue assembly. Remove the screw (2 in Fig. 5.12) securing the terminal end section and remove the end section from the terminal.
ii. Locate a 93° Plume Management bend into the flue assembly and rotate it to the direction required.
iii. Connect to the 93° bend the required Plume Management components as detailed and refer to Fig. 5.13.
   Notes:
   1. The wall support brackets must be used to secure the Plume Management pipework to the wall and prevent disconnection of the 93° bend from the flue assembly or any other component.
   2. Each joint must be secured with one of the screws provided to prevent accidental disconnection.
   3. Ensure there is always a slight slope towards the flue assembly fitted in the wall and there is no part of the plume management pipework where condensate/rain will collect and cause a blockage or any restriction.
iv. Terminate the Plume Management pipework by fitting the terminal end section (push-fit) previously removed. Refer to Fig. 5.13.
v. The Plume Management components available for extending the inner flue duct are as follows:-

   Plume Management 93° bend 60 mm dia. (each 93° bend equivalent to 1.3 m flue length) - Part No. 6.2001390.
   Plume Management 45° bend 60 mm dia. (each 45° bend equivalent to 0.9 m flue length) - Part No. 6.2001345.
   Plume Management 1000 mm extension 60 mm dia. (equivalent to 1 m flue length) - Part No. 6.2001310.
   60 mm dia. wall bracket - Part No. 6.2001260.
   Plume kit (2 x 93° bends 1 x 1000 mm extension and wall bracket) - Part No. 6.2001300.

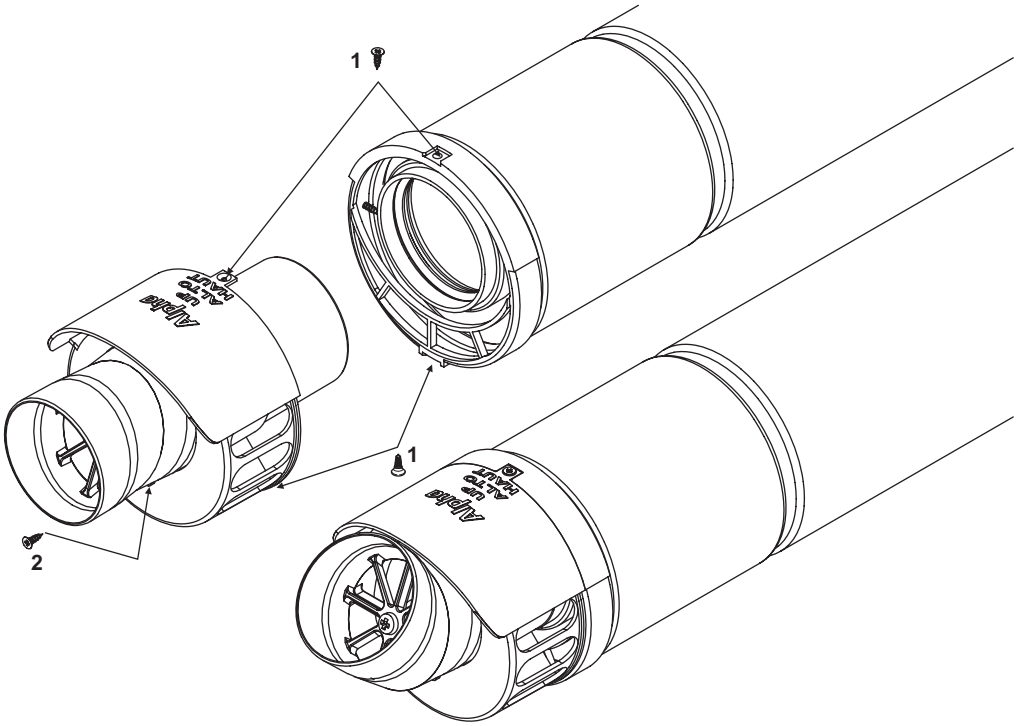

Fig. 5.12

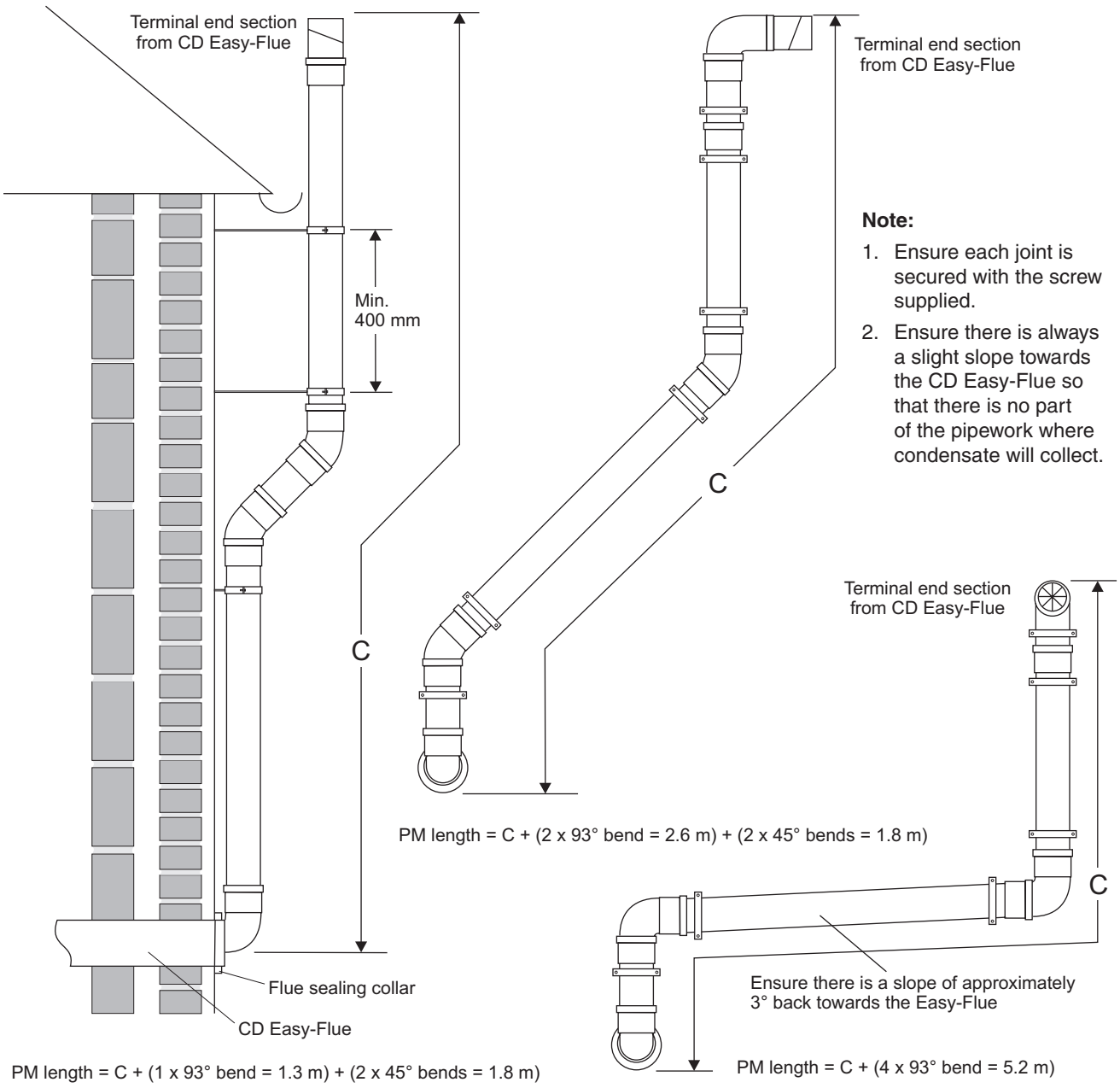

Note:

1. Ensure each joint is secured with the screw supplied.
2. Ensure there is always a slight slope towards the CD Easy-Flue so that there is no part of the pipework where condensate will collect.

Fig. 5.13

Note: The equivalent horizontal flue assembly length + the equivalent plume management length (PM length) must not exceed the maximum flue length stated for each boiler, i.e.

E-Tec boilers - the maximum equivalent flue length must not exceed 12 metres.

5.10 CONNECT THE MAINS SUPPLY - Figs. 5.14 and 5.15

Gain access to the boiler terminal block 'D' as follows:-

Remove the case front panel, refer to Sections 7.1 and 7.2.

Remove the control panel cover 'B'.

1. Remove the one screw 'A' in Fig. 5.14.
2. Depress the two clips on the control panel cover.
3. Remove the cover 'B' from the control panel 'C'.

Refer to Technical Data, Section 3.6 for connection details.

The boiler is supplied with a 'Special X' type electrical connection with a PVC <HAR> H05VV-F 3 x 0.75 cable without a plug. If the power cable is damaged or replaced, it must be replaced with a cable supplied by Alpha or authorized After-Sale Technical Service. Replacement is recommended using a qualified company in order to prevent any risk. Ensure the cable clamp that has been fitted is removed and connect as follows:-

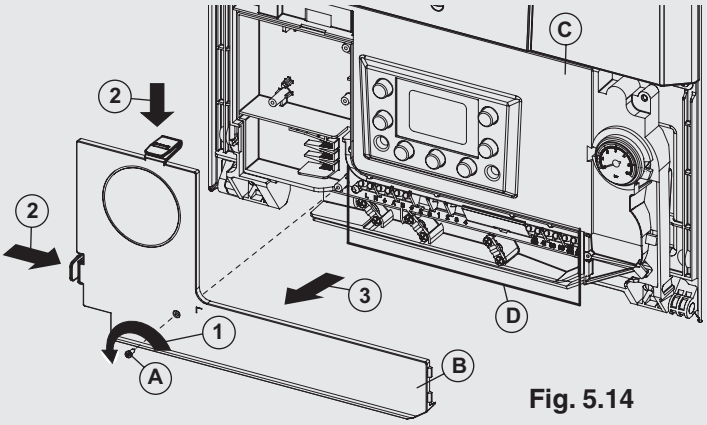

Fig. 5.14

Pass the mains supply cable through the cable clamp and connect as follows:- Brown to L, Blue to N and Green/Yellow to ⏚. Ensure correct polarity.

Note: Ensure that the length of the earth wire is such that if the supply cable is pulled out of its clamp the live and neutral wires become taut before the earth wire.

Do not switch on the electrical supply at this stage.

If an external control, i.e. room thermostat or external clock is to be fitted, remove the link between terminals 1 and 2. Pass the cable through the cable clamp and connect it to terminals 1 and 2. (Refer to Section 3.6).

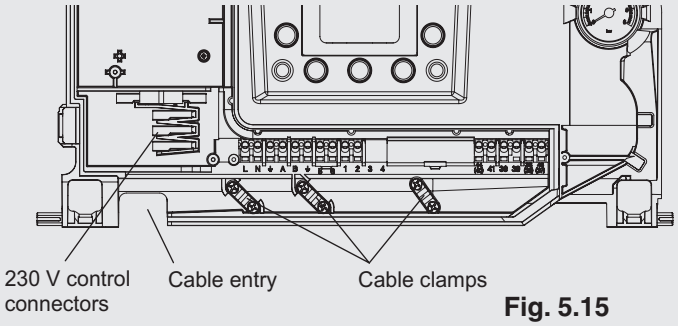

Fig. 5.15

Leave the control panel open until commissioning procedures have been completed.

Carry out electrical system checks - Short circuit, Polarity, Earth continuity and Resistance to earth with a suitable multimeter.

5.11 FITTING BOILER CONTROLS

It is recommended that Alpha controls are used with the boiler to maintain efficient and correct operation of the boiler. Please note that using controls that are not supplied or recommended by Alpha may invalidate the boiler warranty and may not control the boiler correctly.

Alpha offer a number of controls options from simple in-built mechanical timers to remote wireless programmable controllers.

The Alpha Climatic Programmable Modulating Boiler Energy Manager is a two-channel time and temperature programmer with integrated thermostat and 'BUS' system to transfer data between the boiler and controller, enabling full remote control of the boiler functions and display of information. With enhanced boiler control, the unit further increases boiler and system efficiency. Alternatively standard programmable room thermostats or mechanical and digital boiler clocks are available.

Note: Only use a Climatic or suitable single channel Alpha controller. Do not fit a two channel controller.

Connecting Controls

Remove the control panel cover as described in Section 5.10, if it has not already been removed.

Refer to Sections 3.6 and 9.1 for electrical connections and wiring diagram.

Climatic RF receiver installation

1. Plug the connecting wire onto the Climatic receiver PCB supplied with the controller.
2. Using the two screws provided, fix the receiver PCB into position.
3. Route the wire along the groove in the control panel to terminal block connections 44 and 41 (the wires can be connected either way round).
4. Remove the links between terminal blocks 1 and 2.
5. Replace the control panel cover in reverse order.

Note: Ensure all wires and connections are secured safely before replacing covers.

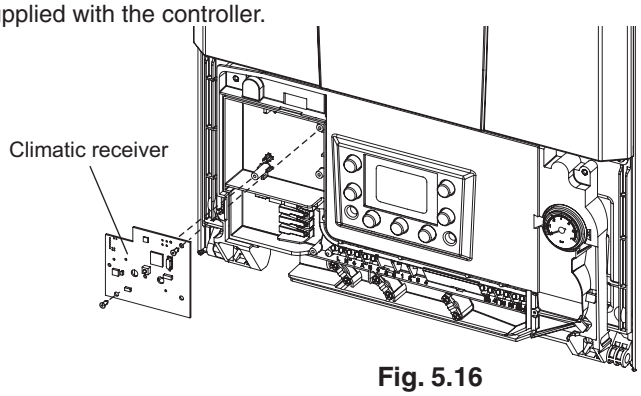

Fig. 5.16

Easy-Stat RF receiver and Digital or Mechanical Clock installation

1. Remove the link between the red wires 3 and 4 and plug all wires on to their corresponding numbers on the receiver or clock.
2. Locate the receiver or clock onto the two pins and using the two screws provided fix into position.
3. Route the wires through the slot in the bottom righthand corner of the housing.
4. Remove the round blanking panel from the cover panel and re-fit the control panel cover in reverse order.

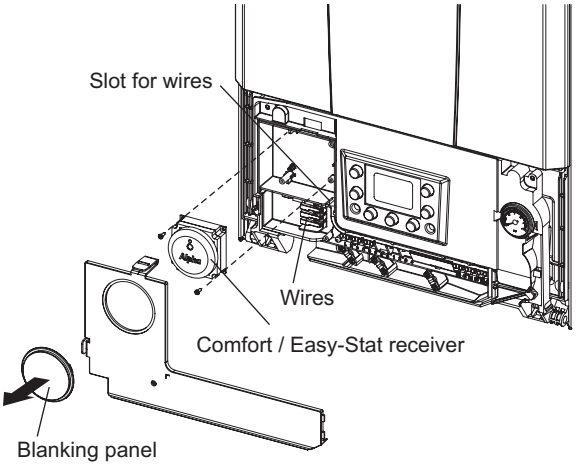

Fig. 5.17

Open Therm type installation

Note: Before purchasing / installing Open Therm type controls from an alternative manufacturer, it is the installers responsibility to ensure they are compatible with the Alpha boiler.

Remove the control panel as described in Section 5.10, if it has not already been removed.

Refer to controls manufacturer's installation instructions for specific mounting / fitting guidance.

Route the BUS communication wires along the groove in the control panel to the terminal block connections 41 and 44 (the wires can be connected either way round).

Ensure the link wire between terminals 1 and 2 remains in place.

Replace the control panel cover in reverse order.

Note: Refer to parameter P7 (see Section 6.13) to select the correct parameter to allow the boiler to operate with alternative control type '1'.

External Sensor – Weather compensation feature

The E-Tec Plus boilers have a built in weather compensation feature which is automatically activated when the external sensor is fitted – Part No 3.022383. When fitted the weather compensation sensor allows the boiler to control the maximum primary flow temperature to the heating circuit according to the outside temperature, heating the property more effectively and efficiently.

Operation

During a central heating on period the sensor monitors the external temperature and modulates the boiler heating output to give the correct flow temperature to maintain the required room temperature. If the external temperature drops then the flow temperature will increase, if the external temperature increases then the flow temperature will decrease. This reduces the amount of wasted energy and reduces gas consumption.

When an external weather sensor is fitted the CH temperature control dial will no longer adjust the flow temperature in °C, instead the display will show a scale of 1 to 9. Each number corresponds to a line on the graph in Fig. 5.18 e.g. line 6 will give a flow temperature of 60°C when the external temperature is 10°C.

Note: The temperature of the radiators will vary depending on the outside temperature; the required room temperature will still be maintained by the room thermostat.

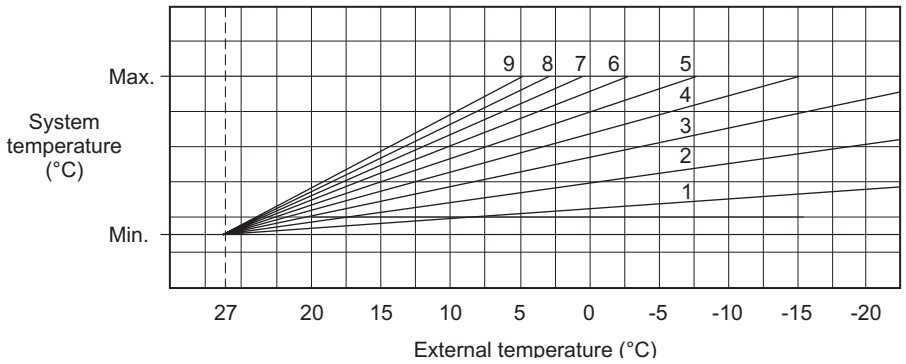

Fig. 5.18

6 COMMISSIONING

When commissioning the boiler, ensure the Benchmark Checklist at the back of these instructions is completed.

6.1 FILL THE SYSTEM

1. The boiler is fitted with an automatic air vent positioned on the pump (see Fig. 7.6), ensure that the vent is always open.
2. Open the central heating flow and return valves (operating lever in-line with valve) (see Fig. 5.4).
3. Open the fill point valves on the filling loop until water is heard to flow (see Section 4.7).
4. To remove the air - Vent each radiator in turn, starting with the lowest in the system.
5. Check the operation of the safety valve (see Fig. 7.6) by turning the head anti-clockwise until it clicks. The click is the valve lifting off its seat allowing water to escape from the system - check that this is actually happening.
6. Continue to fill the system until the pressure gauge indicates 1.0 bar. Close the fill point valve and check the system for water soundness. Disconnect the filling loop from the mains supply.
   Water may be released from the system by manually opening the drain point (see Fig. 7.6) until the system design pressure is obtained. The system design pressure (cold) should be between 0.75 and 1.25 bar.

   Refer to Sections 4.7 and 4.8. Filling and Flushing the system.
7. Open the cold water mains inlet valve (see Fig. 5.4). Turn on all hot water taps and allow water to flow until no air is present. Turn off taps.
8. Ensure that the condensate trap has been filled with water.

6.2 BOILER CONTROLS - Fig. 6.1

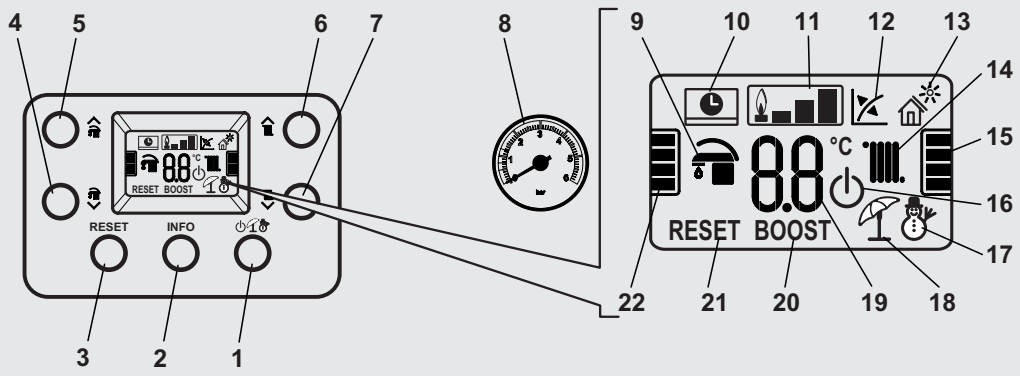

1 - Off/Stand-by/Summer/Winter button
2 - Information button
3 - Reset Button
4 - Reduce DHW set temperature
5 - Increase DHW set temperature
6 - Increase heating system set temperature
7 - Reduce heating system set temperature
8 - Heating system pressure gauge
9 - Domestic hot water active
10 - Remote Climatic controller fitted
11 - Boiler fired and power level
12 - External weather probe fitted
13 - Active solar supply (pre-heated inlet)
14 - Central heating active
15 - Central heating temperature indicator
16 - Boiler in Stand-by mode
17 - Winter mode – heating and hot water
18 - Summer mode – DHW only
19 - Temperature/info/code - display
20 - Boost function active
21 - Boiler locked - reset required
22 - DHW temperature indicator

Fig. 6.1

6.3 TEST FOR GAS TIGHTNESS AND PURGE THE SUPPLY

1. With the boiler connected, pressure test the gas supply and inlet pipework connected to the boiler for tightness in accordance with BS 6891.
2. Loosen the gas inlet pressure test point screw on the gas valve (see Fig. 6.2) and purge in accordance with BS 6891.
3. Retighten the test point screw and test for gas tightness. Close the boiler gas service cock.

6.4 INITIAL LIGHTING - Refer to Fig. 6.1

When the system has been filled and vented, the boiler can then be turned on and commissioned.

1. Before turning on the gas and electrical supplies check the heating system is filled to the correct pressure. Refer to Section 6.1 Fill the System. The pressure gauge on the right of the control panel indicates the heating system pressure. When the boiler is cold the needle should be within the green band.
2. With the gas and electrical supplies to the boiler off, ensure that the mains water inlet valve and the central heating flow and return valves are open.
3. Turn on the gas and electrical supplies to the boiler.
   Press the ( ) button, (item 1 in Fig. 6.1) repeatedly to scroll between the three modes Standby ( ), Summer ( ) or Winter ( ) or press and hold it in for 8 seconds to turn the boiler off (when off a dot appears on the display).

   Note: This **does not** isolate the electricity supply to the boiler.
4. Ensure all external controls are calling for heat.
   If the optional controls are fitted, refer to the instructions supplied, and ensure they are in an 'on' mode.
5. **Summer** ( ): In this mode the boiler will only produce domestic hot water. The desired hot water temperature can be set using the domestic hot water up and down ( ) buttons and is shown on the display.

   Winter ( ): In this mode the boiler will supply domestic hot water and central heating depending on the request from any controls fitted. The domestic hot water temperature is always regulated via the up and down buttons ( ), the central heating temperature is regulated via the central heating up and down buttons ( ) with the temperature being shown on the display.

   Note: If a weather compensation sensor is fitted a gradient value of 1 to 9 is displayed (see Fig. 6.1) when adjusting the central heating temperature. This is because the boiler output is modulated according to outside temperature. Refer to external sensor instructions for further information on this feature and Section 5.11.
6. From this moment the boiler functions automatically. With no demand for heat (central heating or domestic hot water production) the boiler goes to 'standby' function.
   Each time the burner ignites, the flame present symbol ( ) is displayed together with the relative strength of the flame (output power).
7. **Operation with Climatic control (Optional)**. If the Climatic control is connected, the ( ) symbol will appear on the display. The boiler regulation parameters can be set via the Climatic control panel and the '**RESET**' button remains active on the boiler control panel, along with the standby button ( ) ('off' mode only) and the display where the functioning state is shown.

   Note: If the boiler is switched 'off' the Climatic control will display the connection error symbol 'ERR>CM', the Climatic control is however powered constantly so as not to lose the stored programs.
8. **Solar operating mode** ( ). This function is activated automatically if the boiler detects a probe on the domestic hot water inlet (optional) or if the 'Solar ignition delay' parameter is more than 0 seconds.
   When there is a demand for hot water and the outlet water is hot enough or if there is 'Solar ignition delay' time, the boiler does not switch on, the domestic hot water symbol ( ) appears on the display along with the flashing solar function symbol ( ).
   When the water supplied by the solar system is at a temperature lower than what is set, or if the 'Solar ignition delay' time has elapsed, the boiler switches on. At this point, the solar function symbol remains permanently on.
9. **Operation with optional external sensor** ( ). In the case of a system with optional external sensor, the boiler flow temperature for central heating is managed by the external sensor depending on the external temperature measured.
   The flow temperature can be modified by selecting the functioning curve using the ( ) buttons (or on the Climatic control panel, if connected to the boiler) selecting a value from '0 to 9'.
   When an external sensor is used, the relative symbol ( ) will appear on the display. In the central heating mode, if the temperature of the water in the system is sufficient to heat the radiators, the boiler can only function when the pump is activated.
10. **'Stand-by' mode.** Press ( ) button repeatedly until the symbol ( ) appears. From now on the boiler remains inactive with the antifreeze function, pump anti-block function and 3-way and signalling of any anomalies guaranteed.

    Note: This **does not** isolate the electricity supply to the boiler.
11. '**Off' mode.** By holding the ( ) button in for 8 seconds, the display switches off and the boiler is off completely. The safety functions are not guaranteed in this mode.

    Note: While not having functions active, in these conditions the boiler must be considered still live. This state is displayed by a 'dot' lit in the centre of the display.
12. **Display functioning.** The display lights up while the control panel is being used, after a set inactivity period the brightness drops until only the active symbols are displayed. The lighting mode can be varied via parameter 't8' in the PCB programming menu.

For any controls fitted please refer to the instructions supplied with the controls for connection and operation details and Section 5.11.

6.5 BOILER OPERATION

Domestic hot water supply always takes priority over central heating. If a demand for hot water is required during a central heating period, the boiler will automatically switch to the hot water mode until the demand is satisfied. This interruption in the central heating is only when the demand for hot water is present and should not be noticed by the User.

Central Heating Mode

If there is a call for heat, the pump will start to circulate the central heating water. The fan will run and the premix burner will light. The burner output then automatically adjusts to suit the system demand; as the temperature of the water in the boiler approaches that set by the adjustable temperature thermostat, the burner output is reduced. When the set temperature is reached, the burner is turned off. The fan continues to run for 30 seconds and the pump continues to run for three minutes, after which the burner can relight if required. If the primary sensor has not registered the preset temperature but the room thermostat is satisfied the burner is turned off. The fan continues to run for 30 seconds and the pump continues to run for 10 seconds. In this instance there is no delay before the burner will relight.

If there is a demand for DHW during the burner delay, the boiler will operate to provide DHW until the tap is closed; the boiler will then revert to provide CH if there is a demand.

Note: If the system pressure is very low, the primary pressure switch will prevent the boiler from operating.

Domestic Hot Water Mode

When a demand for hot water (by opening a hot tap, etc.) is sensed by the flow switch, the pump starts, the fan will run and the burner lights, increasing immediately to its maximum output. Water in the boiler is then diverted from the central heating system to the domestic hot water heat exchanger, heating the incoming mains water. The burner output is varied to maintain the temperature of the hot water as that set by the adjustable temperature selector. When the flow switch senses that hot water is no longer required the burner is turned off and the boiler returns to the central heating mode.

If the boiler is set for hot water only (Summer) - The burner is turned off, the fan will continue to run for 30 seconds and the pump will stop immediately. In both modes the fan modulates according to the output required.

Frost Thermostat

The boiler incorporates a built in frost thermostat which automatically turns on the boiler if the water in the boiler falls below 4°C, providing the electrical supply is on and the boiler is in standby mode. The boiler will operate until the water temperature in the boiler reaches 42°C.

Any other pipework outside of the boiler must be protected from the risk of freezing and insulated. Additional protection from an external frost thermostat and pipe thermostats should be considered.

Boiler frost protection will not prevent damage caused by freezing of pipework outside the boiler casing (i.e. external pipework, incoming cold mains etc.). Boiler damage caused by freezing external pipework is not covered under warranty.

Pump Cycle

If the electrical supply is on and the boiler has not operated for 24 hours in heating or hot water, the pump will operate automatically for thirty seconds every 24 hours.

6.6 CHECKING THE COMBUSTION - CHIMNEY SWEEP MODE

As part of the Benchmark Checklist procedure the combustion levels of the boiler when the installation is completed must be measured and recorded.

The air gas ratio of the boiler has been factory-set and should not require adjusting during commissioning. If adjustment is recommended or required the engineer must be competent to carry out this work. See Fig. 6.3 for analyser test point.

If the boiler requires adjusting or setting to operate on LPG, further guidance is detailed in Section 6.11.

Chimney Sweep Mode

Without any CH or DHW demand, press and hold the reset button for eight seconds and the boiler will fire at a fixed output. The parasol and snowman ( ) will flash at the same time to indicate this mode, if a Climatic controller is fitted it will display ERR>07 code on the controller (this is not a fault).

Using the DHW up and down buttons you can change between three predefined output levels:

- 0% (low fire)
- 80 - 90% (Max CH output) **Note:** CO_2 testing at this output is not required - % output depends on model and gas type
- 99% (Max DHW output)

This mode will remain active for fifteen minutes or can be cancelled by turning the boiler off.

Use the DHW down button to set the output to minimum to check the minimum CO_2 reading, wait for the boiler stabilise, check the combustion and record the reading.
Use the DHW up button to set the output to maximum to check the maximum heating CO_2, again allow the burner to stabalise and record the reading.

If the flow temperatures are getting up to maximum operating temperature during the procedure it is possible to open a hot tap to lose some heat.

If the CO_2 readings are not within the stated tolerance (refer to Section 2.1) then check the installation including the complete flue assembly and repeat the above process.

The CH up and down buttons can be used to increase and decrease the output in incremental steps if required.

When checking at maximum output the boiler will have a higher noise level, this is normal.

6.7 FINAL COMMISSIONING

1. Allow the heating system to heat up, then balance the system to achieve the necessary temperature difference across the heating flow and return pipes at the boiler and check the system volume and pressure. (Refer to Section 3.1).
2. Turn off the boiler.
3. Thoroughly flush out the water pipework (refer to Section 4.8). Clean the mains water inlet filter (see Fig. 5.4).
4. Refill and re-pressurise the system as described in Section 6.1.
5. Add the correct level of inhibitor to the system as detailed in the instructions supplied with the inhibitor.

6.8 FINAL ASSEMBLY

1. Raise the control panel and secure in position with the screws provided.
2. If the boiler is to be left in service with the User, set the controls, clock (if fitted, see User's Operating manual) and room thermostat (if fitted) to the User's requirements.
3. If the boiler is not to be handed over immediately, close the boiler gas service cock and switch off the electrical supply.
4. If there is any possibility of the boiler being left during frost conditions, then the boiler and system should be drained (refer to Section 8.2). It is recommended that a label is attached to the boiler drawing attention to the fact that the system has been drained.
5. Complete the details of the installation in the Benchmark Checklist at the back of these instructions.

6.9 USER INFORMATION

The User must be advised (and demonstrated if necessary) of the following important points:-

1. How to light and turn off the boiler and how to operate the system controls.
2. The importance of annual servicing of the boiler to ensure safe and efficient operation and maintain the boiler guarantee.
3. That any servicing or replacement of parts must only be carried out by a Gas Safe registered engineer.
4. Ensure that the boiler controls and room thermostat (if fitted) are set to the User's requirements.
5. Tell the User about the sealed system pressure.
6. Tell the User that if the electrical supply is on and the boiler has not operated for 24 hours for heating or hot water, the pump will automatically operate for 30 seconds.

7. Explain to the User that an internal frost thermostat is fitted in the boiler, and that the electrical supply to the boiler must be left on for the thermostat to operate, i.e. the boiler must be set to standby.
8. Explain to the User that in certain weather conditions the flue terminal will emit a plume of steam, i.e. water vapour. This is safe and quite normal.
9. Show the User the position of the condensate discharge pipes.
10. Leave the instructions with the User.
11. Ensure the Benchmark Checklist at the back of these instructions has been completed after the boiler has been installed and commissioned.
    Note: It is a requirement that the installation is registered by the installer through the Gas Safe Gas Work Notification Scheme.
12. Leave these Installation and Servicing instructions with the User for use on future calls.

6.10 INFORMATION MENU

By pressing the **INFO** button (item 4 in Fig. 6.1) for >1s the information menu is accessed, this will then show the information according to the table below. Scroll through the information using the DHW up and down temperature buttons.

Pressing to show the value and Reset to return to the Info number.

Info Menu (d - prefix)	Information	Units Shown
d0	FlowSmart cylinder temperature adjustment (optional) with Alpha Diverter kit only	°C
d1	Flame signal	µA
d2	Central heating water temperature leaving the boiler	°C
d3	Domestic hot water temperature leaving the boiler	°C
d4	Central heating set point temperature	°C
d5	Domestic hot water set point temperature	°C
d6	External weather compensation probe temperature (value flashes if negative)	°C
d7	Mains inlet temperature or FlowSmart cylinder temperature	°C
d8	CH return temperature	°C
d9	Fault history - by using the CH buttons (item 6 in Fig. 6.1) in this menu the last five faults will be displayed	Error code
d10	Fault history reset - when in this menu, press and hold the Summer/Winter button to clear the fault code history	
d11	Not used	
d12	Pump speed (0 = OFF, 1,2,3,4,5,6,7,8,9)	Speed level
d13	Not used	
d14	CH flow	l/h/100
d15	Fan speed during current operation	rpm/100
d16	Flue sensor reading	°C
d17	Calculated flow temperature	°C
d18	Screed heat function, hours operated	h
d19	Toggles between safety software version / functional software version	n/a
d20	Not used	
d21	Not used	
d22	Service reminder function, number of months remaining	months

6.11 CONVERTING THE BOILER TO OPERATE ON LPG

If the boiler has to be converted for LPG, obtain the relative conversion kit. The gas conversion operation must be carried out by a competent and suitably qualified Gas Safe registered engineer.

To convert to LPG the following operations are required:

- Isolate the appliance from the electric and gas supplies.
- Replace the injector located on the upper fitting of the gas valve and re-seal the connections (Fig. 7.6).
- Re-instate gas and electric supplies.
- Calibrate the new fan speed for LPG (Section 6.13).
- Check / adjust the correct CO_2 (Section 6.12).
- After completing the conversion, apply the sticker (supplied in the conversion kit) near the boiler data plate. Using an indelible marker pen, delete the data relative to the old type of gas.

These adjustments must be made according to the type of gas used, given in the table (Section 3).

6.12 CO_2 SET UP PROCEDURE

The air gas ratio of the boiler has been factory set and should not require adjusting during first commission. If adjustment is recommended or required the engineer must be competent to carry out this work.

If setting the boiler on a Hydrogen mix installation (G20Y20), for all calibration and combustion checks, refer to the O2% values for the flue gas analysis. See Section 3.1.

Before starting this procedure please check the following:

The front case is fitted.
The flue system is not blocked or restricted and is to the correct specification.
The gas supply working pressure is correct and the system has been purged.
There is no recirculation in the boiler flue circuit.
The condensate trap is pre-filled.

If the flow temperatures are getting up to maximum operating temperature during the procedure it is possible to open a hot tap to lose the heat.

Attention: the CO_2 checks must be carried out with the case fitted, while the gas valve adjustments must be carried out with the front case removed.

Calibration of the minimum CO_2 (minimum output)

Refer to Section 6.6 and enter the chimney sweep mode (with no DHW demand) use the DHW down button to set the output to minimum (0%). Insert the analyser probe into the flue test point (Fig. 6.3) and check that the CO_2 value is as specified in Section 3.1, otherwise adjust the screw (Fig. 6.2) To increase the CO_2 value, turn the adjustment screw in a clockwise direction and vice versa to decrease.

Calibration of the maximum CO_2 (nominal DHW output)

When you finish the minimum CO_2 adjustment, while maintaining the chimney sweep function active, use the DHW up button to set the output to maximum (99%). Insert the analyser probe into the flue test point (Fig. 6.3) and check that the CO_2 value is as specified in Section 3.1, otherwise adjust the screw (Fig. 6.2). To increase the CO_2 value, turn the adjustment screw (Fig. 6.2) in a clockwise direction and vice versa to decrease it.

At every gas valve adjustment, it is necessary to wait for the boiler to stabilise itself at the value set (approx. 30 sec.).

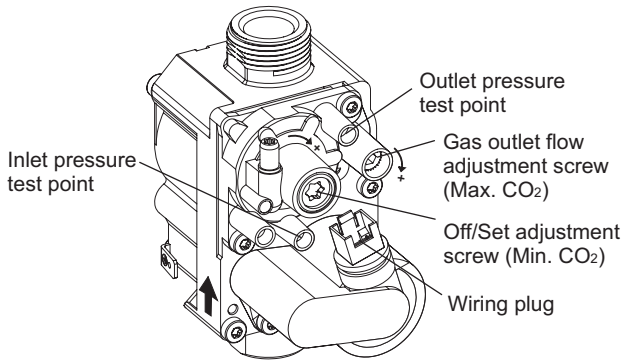

Fig. 6.2

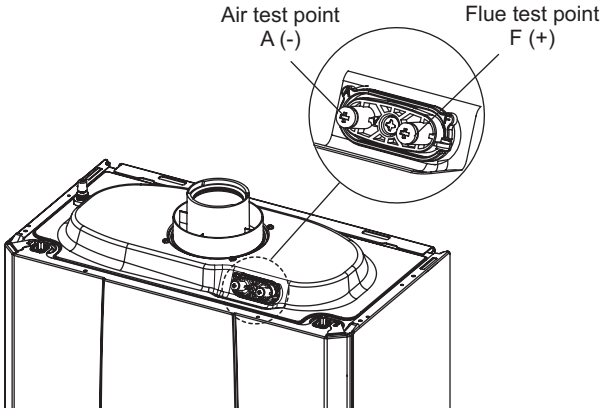

Fig. 6.3

6.13 PROGRAMMING THE PCB

The boiler has the ability to programme several operational parameters. By modifying these parameters as described below, the boiler can be adapted according to specific needs.

To access the programming menu, press and hold the (**RESET**) and (**INFO**) buttons at the same time for 5 seconds, the display will show two flashing dashes (**- -**), next enter the password '**69**' to access the programming menu.

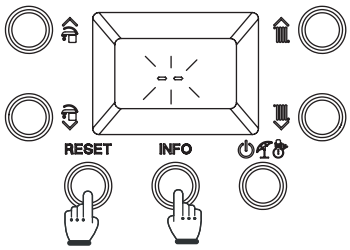

Fig. 6.4

To enter the first digit of the password use the DHW up and down buttons ( ), to enter the second digit use the CH up and down buttons ( ). To confirm the password and access the menu, press the operating mode button ( ).

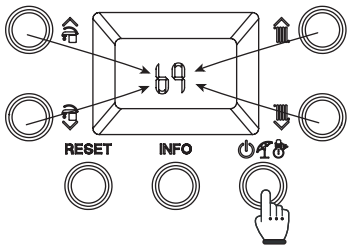

Fig. 6.5

Once in the menu you can scroll through the four submenus (P, t, A, S) by pressing the DHW up and down buttons ( ), to access the menu press the button ( ).

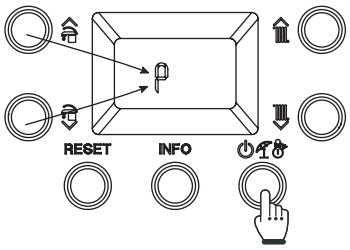

Fig. 6.6

The first digit of the display shows the ID of the parameter, while the second digit shows its number.

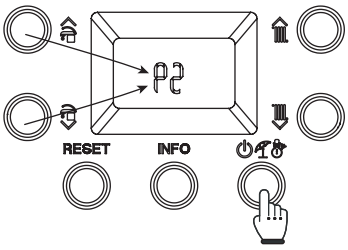

Fig. 6.7

Pressing the mode button ( ) displays the parameter and by pressing the CH up and down buttons ( ) you can adjust its value.

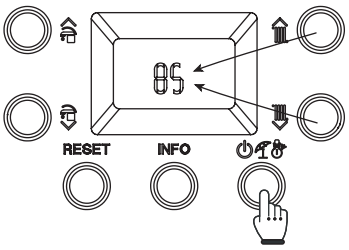

Fig. 6.8

Press the mode button ( ) for more than 1 second to store the parameter value. Confirmation is given by the numbers 88 which appear for 2 seconds.

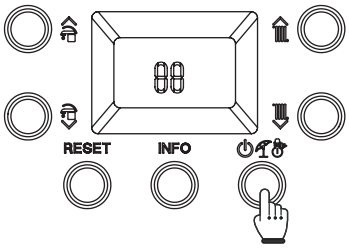

Fig. 6.9

If you want to exit a parameter without changing its value, press the (**RESET**) button.

Wait for 15 minutes or press the (**RESET**) button to exit the programming mode.

Programming sequence

RESET + **INFO** > 5 secs	Menu 'P' 't' 'A' 'S'	← **RESET**	P0 - P5 t0 - t9 A0 - A6 S0 - S2	← **RESET**	Parameter value	← **RESET** (Without memorising) > 1 sec (Memorise)	88

ID	Parameter	Description	Range	Default		
				E-Tec Plus 28	E-Tec Plus 33	E-Tec Plus 38
S0	DHW minimum no. of fan revs	Defines the operating speed of the fan at minimum DHW output	20 - 60 (X 50 RPM)	NG = 27 LPG = 26	NG = 28 LPG = 28	NG = 27 LPG = 28
S1	DHW maximum no. of fan revs	Defines the operating speed of the fan at maximum DHW output	S0 - 140 (X 50 RPM)	NG = 121 LPG = 115	NG = 128 LPG = 121	NG = 122 LPG = 117
S2	Ignition phase no. of fan revs	Defines the operating speed of the fan during the ignition phase	40 - 80 (X 50 RPM)	56	56	56

ID	Parameter	Description	Range	Default
P0	Max. DHW output	Defines the maximum heat output percentage of the boiler during DHW mode	0 - 100 %	100 %
P1	Min. CH output	Defines in percentage the minimum output in central heating	0 - P2	0 %
P2	Max. CH output	Defines the maximum heat output percentage of the boiler during the central heating mode compared to the maximum heat output available	0 - 100 %	E-Tec Plus 28 NG - 85 LPG - 82 E-Tec Plus 33 NG - 85 LPG - 85 E-Tec Plus 38 NG - 80 LPG - 82
P3	Relay configuration Boiler terminals 5 and 6 used for external devices 5 = L, 6 = N (230V ac)	**0** - OFF **1** - Main zone control (with Climatic controller) **2** - General alarm **3** - CH phase active (external pump) **4** - External gas valve power supply **5** - Not used on this model **6** - When boiler pump active **7** - Alpha Trace heating cable enabled **8** - Not used **9 -** FlowSmart function enabled.	0 - 9	3
P4	Pump functioning	The boiler pump can function in two ways. **0 Intermittent** - The pump is controlled according to the heating request of a room thermostat or remote control **1 Continuous** - In 'Winter' mode the pump runs continuously	0 - 1	0
P5	External sensor	If the reading of the external sensor is not correct it is possible to adjust the reading to correlate with the true outside value	-9 +9 K	0
P6	Service reminder timer (See error code Sr, Section 10.1)	Time in months after which 'Sr' (service reminder) is displayed **0** - Off (timer disabled) **1-36** - Timer enabled, months until 'Sr' service reminder message displayed **Note:** The service counter (when activated) will only count down when the boiler is connected to a live power supply	0 - 36	0
P7	Remote control communication protocol setting	Section of the remote control communication protocol **0** - Alpha Climatic **1** - OpenTherm type remote control - Boiler terminal block link 1 to 2 must be present	0 - 1	0

ID	Parameter	Description	Range	Default
t0	CH set point minimum	Defines the minimum flow temperature	20 - 50 °C	25
t1	CH set point maximum	Defines the maximum flow temperature	(t0 + 5) - 85 °C	85
t2	Solar delay timing	The boiler is set to switch-on immediately after a request for DHW. If a solar or other pre-heated supply is connected to the boiler, it is possible to delay the boiler firing in order to allow the pre-heated supply to reach the boiler. Set the time according to the desired delay for this function.	0 - 30 seconds	0
t3	DHW priority timing	At the end of a domestic hot water request the boiler will switch to central heating mode if there is a request. It is possible to set a time delay in which the boiler waits before changing back to heating mode in order to quickly satisfy a request for domestic hot water again.	0 - 100 seconds (10 sec steps)	2 (20 sec)
t4	CH ignition timer	The boiler has electronic timing, which prevents the burner from cycling too often in central heating mode	0 - 600 seconds (10 sec steps)	18 (180 sec)
t5	CH ramp timer	In central heating mode the boiler performs a timed ramp up in order to reach the maximum output set	0 - 840 seconds (10 sec steps)	18 (180 sec)
t6	CH ignition delay from TA and CR request	The boiler is set to switch-on immediately after a request. For zoned or complex systems with motorised and thermostatic valves it may be necessary to delay ignition to prevent overheating	0 - 600 seconds (10 sec steps)	0
t7	Display lighting	Display lighting mode **0 Automatic** - The display lights up during use and dims after 15 secs of inactivity. In the event of an anomaly the display flashes. **1 Low** - The display is always lit with low intensity **2 High** - The display is always lit with high intensity	0 - 2	0
t8	Display	LCD display setting 'Summer' mode **0** - The display is always off **1** - Displays the flow temperature during operation and off when no request 'Winter' mode **0** - The display shows the set value of the CH selector **1** - The display shows the flow temperature during operation and the set value with no request	0 - 1	1
t9	CH flow off offset	The switch-off temperature of the flow is increased by the set value during the first 60 seconds of a central heating request to overcome any residual heat in the boiler	0 - 15°C	0

A0	DHW hydraulic selection	Defines the type of DHW hydraulics in the boiler **0** - Instant **1** - Not used on this model	0 - 1	0
A1	Max. pump speed	Defines the maximum operating speed of the pump (if A1 = A2 pump is operating at set speed)	A2 - 9	9
A2	Min. pump speed	Defines the minimum operating speed of the pump	1 - A1	E-Tec Plus 28=6 E-Tec Plus 33=5 E-Tec Plus 38=5
A3	Pump operating mode	Sets the pump operating mode **ΔT** = 0: proportional head (see Section 3.5) **ΔT** = 5 - 25K: ΔT constant (see Section 3.5)	0 - 25	15
A4	-	Not used on this model	-	-
A5	-	Not used on this model	-	-
A6	DHW thermostat	Establishes the switch-off method in DHW mode when the flow rate is below the minimum output available **0 Fixed** - The switch-off temperature is fixed at the maximum value regardless of the value set on the control panel **1 Corrolated** - The boiler switches off according to the temperature	0 - 1	0

7 ROUTINE SERVICING

To ensure efficient operation of the boiler it is recommended that it is checked and serviced as necessary at regular intervals. The frequency of servicing will depend upon the particular installation conditions and usage, but in general once per year is required as a minimum.

It is the law that any service work must be carried out by a competent person, i.e. Gas Safe registered engineer.

Appropriate personal protective equipment should be worn.

Warning: Before servicing the boiler, isolate the electrical supply and close the boiler gas service cock. Allow the boiler to cool.

Always test for gas tightness after servicing any gas carrying components.

Always carry out electrical system checks i.e. Earth Continuity, Resistance to Earth, Short Circuit and Polarity with a suitable meter before and after servicing.

General

Please Note: During routine servicing, and after any maintenance or change of part of the combustion circuit, the following must be checked:

1. The integrity of the flue system and the flue seals, as described in Section 5.6 and 5.7.
2. The integrity of the boiler combustion circuit and relevant seals.
3. The operational (working) gas inlet pressure at maximum rate.
4. The combustion performance, as described below and in Section 6.6.

Competence to carry out the check of combustion performance

Please Note: *BS 6798:2009 Specification for installation and maintenance of gas-fired boilers of rated input not exceeding 70 kW net* advises that:

1. The person carrying out a combustion measurement should have been assessed as competent in the use of a flue analyser and the interpretation of the results.
2. The flue gas analyser used should be one meeting the requirements of BS 7927 or BS-EN 50379-3 and be calibrated in accordance with the analyser manufacturers' requirements.
3. Competence can be demonstrated by satisfactory completion of the CPA1ACS assessment, which covers the use of electronic portable combustion gas analysers in accordance with BS 7967, Parts 1 to 4.

Combustion check

Connect the flue gas analyser to the flue gas sampling point as shown in Fig. 6.3.

Notes: 1. Prior to servicing, it is recommended that a flue gas analyser is used to measure the performance of the boiler (refer to Fig. 6.3 for the position of the flue sampling point). Refer to Section 6.6 Checking combustion. If the CO/CO_2 ratio measured is greater than 0.004 **or** when other checks or comments from the customer have indicated that there may be problems, check the following:

Any flue gas recirculation in the flue system or boiler casing.

Any restrictions or blockages in the flue system.

The gas supply pressure and gas rate are correct.

If these are correct then cleaning of the burner and checking the electrode will be necessary. All Sections 7.1, 7.2, 7.3, 7.4 and 7.5 **must** be carried out. After reassembling the boiler repeat the flue gas analyser test and check that the CO/CO_2 ratio is less than 0.004.

If the CO/CO_2 ratio reading is still above 0.004, check again for flue gas recirculation, flue restrictions or blockage and insufficient gas supply pressure. If correct, repeat the procedure above until you obtain a ratio reading of below 0.004.

If the combustion reading is greater than the acceptable value <u>AND</u> the integrity of the complete flue system and combustion circuit seals have been verified and the inlet gas pressure (and gas rate) have been verified. Please call our Technical Helpline.

2. If the CO/CO_2 ratio measured is less than 0.004 and other checks and comments from the customer suggest there are no problems then only Section 7.1 and Section 7.3 paragraphs 1, 2 and 3 need to be carried out to allow a visual check of the components within the room sealed chamber.

Note: For any maintenance operation not shown, contact Alpha Innovation Helpline.

7.1 IMPORTANT NOTES PRIOR TO SERVICING

1. Check the entire flue length and joints including the flue terminal outside. Ensure that all of the flue assembly has been installed correctly and there are no blockages.
2. Run the boiler and check the operation of its controls.
3. Ensure that all system connections and fittings are sound. Remake any joints and check the tightness of any fittings that may be leaking.
4. Refill, vent and re-pressurise the system as necessary. (Refer to Commissioning, Section 6.1).
   If the system pressure exceeds 2.5 bar when operating at maximum temperature, the heating expansion vessel should be checked and re-pressurised, if necessary.

   Note: **1.** Check the expansion vessel charge only when the system pressure is zero.
   2. The expansion vessel pressure test point is accessible from on top at the top left side.
5. Check that the condensate trap drain pipe is connected and all joints are sound.
6. Record details of the service in the Service Record at the back of these instructions.

7.2 CASING REMOVAL - Figs. 7.1, 7.2, 7.3 and 7.4

To facilitate boiler servicing and maintenance the casing can be completely removed as follows:

Control panel cover - Fig. 7.1

1. Open the lower cover. Remove the two screw cover plugs 'A' and remove the screws 'B'.
2. Lower the front panel 'C' towards you and release the covers from the lower fixings.

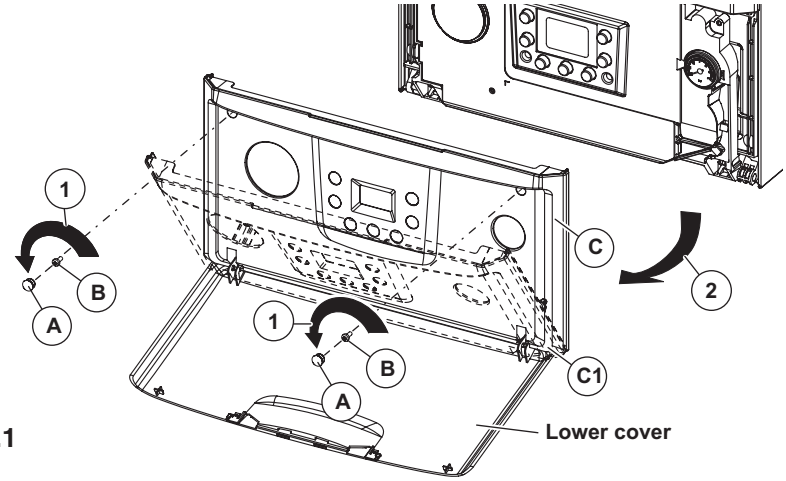

Fig. 7.1

Case front panel - Fig. 7.2

3. Remove the two screws 'D'.
4. Pull the front panel 'E' slightly towards you.
5. Release the front panel 'E' from pins 'F' pulling it towards you while pushing it upwards at the same time.

Take care not to damage the insulation on the back of the panel as this forms part of the casing room seal.

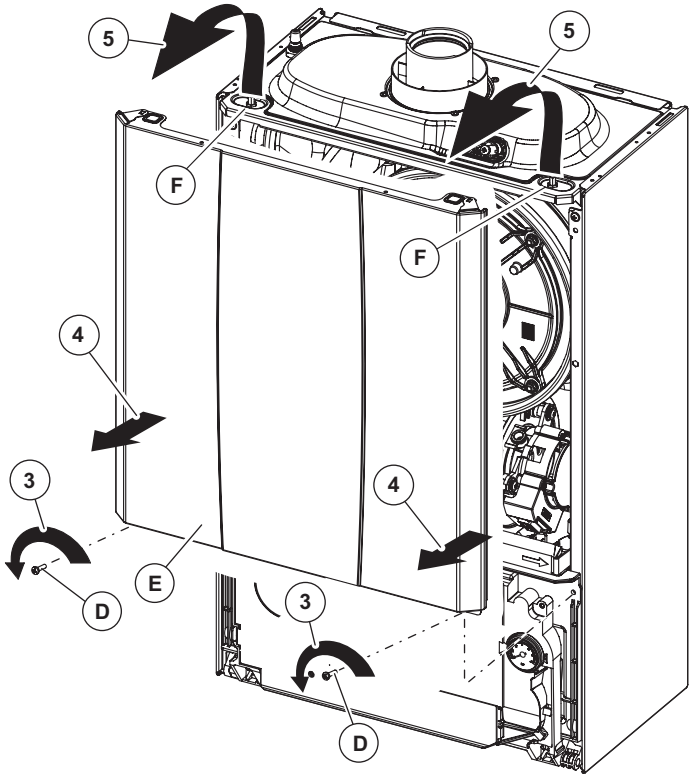

Fig. 7.2

Control panel - Fig. 7.3

6. Press the hooks on the side of the control panel (G).
7. Tilt the control panel (G) towards you.

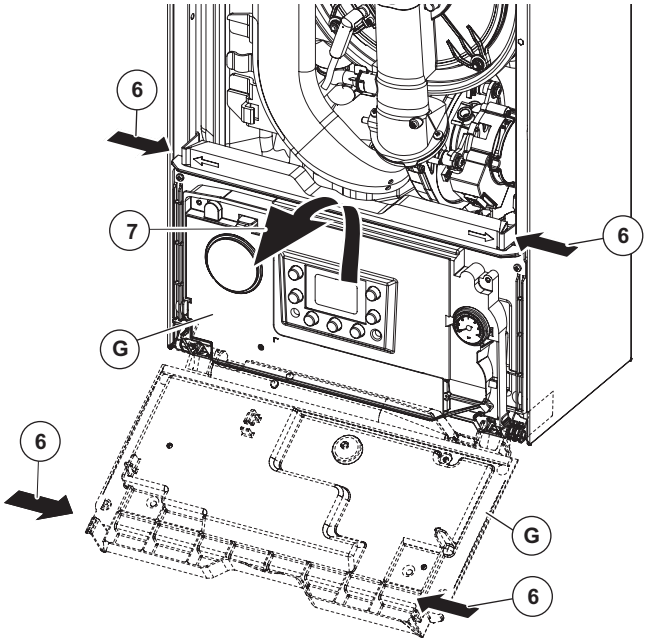

Fig. 7.3

Side panels - Fig. 7.4

8. Remove the screws 'H' securing the side panel 'I'. Lift the side panel and pull it forwards unhooking it from the rear panel (view 'A' in Fig. 7.4) Lower the panel out and away from the top cover.

Note: The side panels require no sealing strip as the front case insulation forms the room seal.

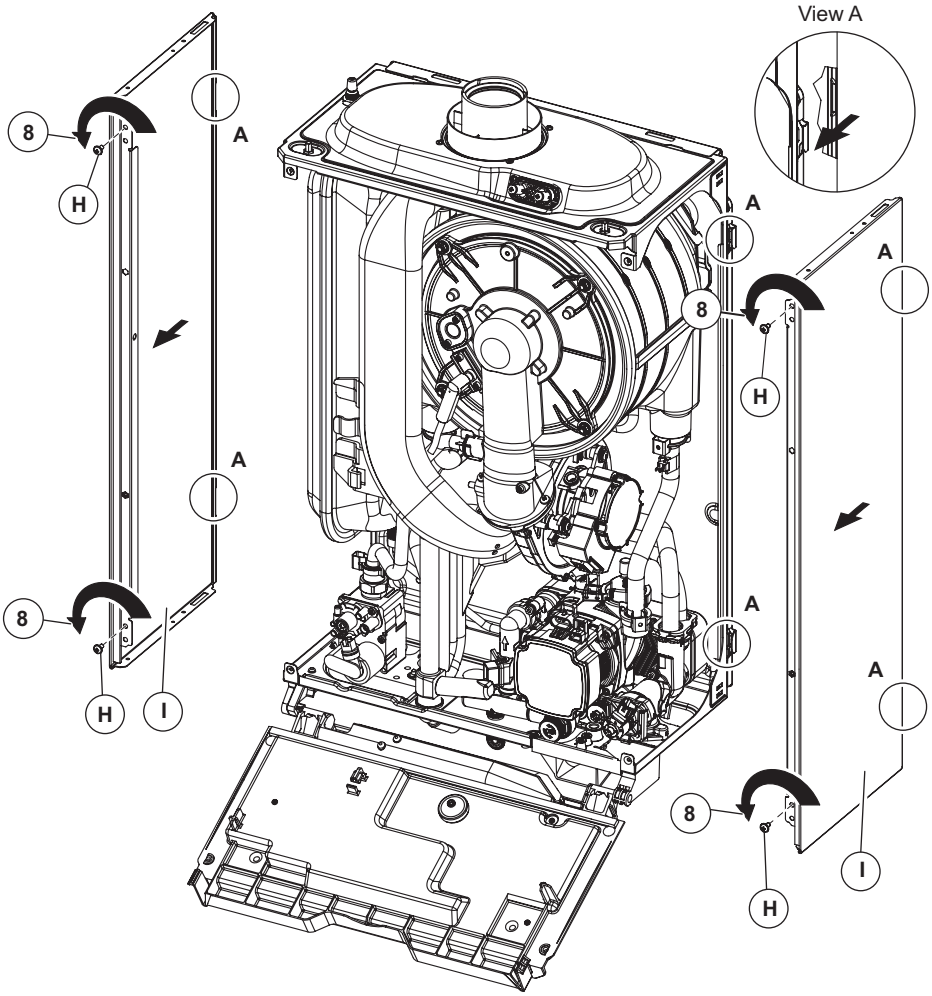

Fig. 7.4

7.3 PREPARE FOR SERVICING - Fig. 7.5

1. Ensure the electrical supply is isolated and the gas supply is off.
2. Gain access by removing the control panel cover, case front panel and lowering the control panel as described in Section 7.2.
3. Remove the condensate trap assembly and clean as described in Section 8.11.
4. Remove the single screw securing the top of the air supply pipe and withdraw it from the fan connection.
5. Pull off the ignition lead from the electrode.
6. Remove the upper and lower spring clips from the gas supply pipe.
7. Remove the gas valve pressure tube from the fan inlet
8. Disconnect the fan wiring connector.
9. Remove the four 10 mm nuts securing the combustion chamber front assembly. See Fig. 7.6.
10. Withdraw the complete burner/fan/air inlet assembly towards you.

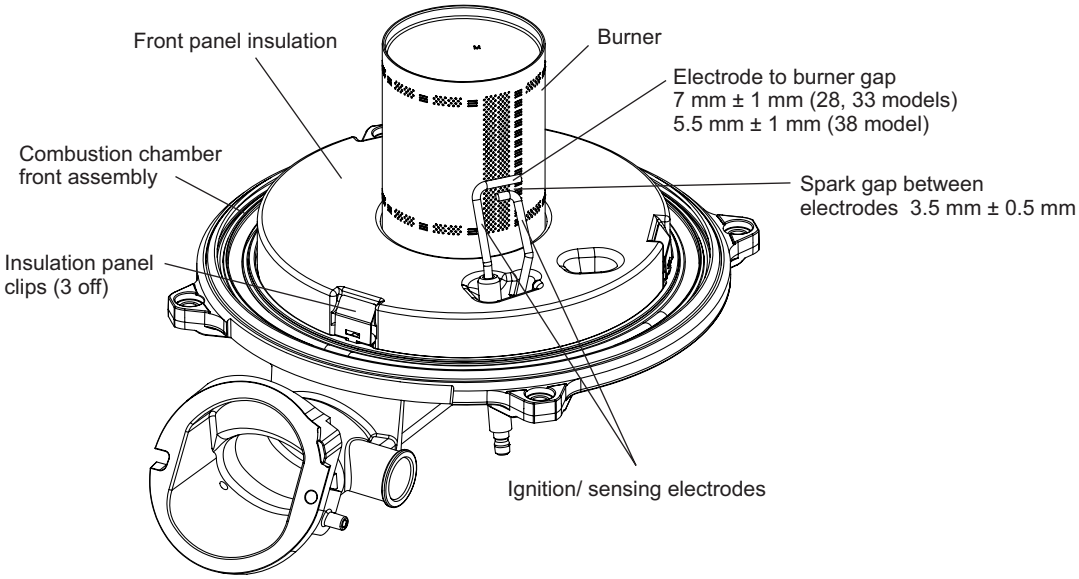

Fig. 7.5

7.4 CLEANING THE ELECTRODES, BURNER AND FAN

1. Check the condition of the burner. Clean carefully using a vacuum or compressed air.
2. Check the condition and gap of the electrodes.
   If they are in good condition, remove any oxide deposits using a fine abrasive paper.
   If it is necessary to replace the electrode assembly, ensure a new gasket is used.
3. Check that the fan is clean and rotates freely. Carefully clean the impellor with a soft bristle brush if necessary

7.5 CLEANING THE HEAT EXCHANGER (with the condensate trap in place)

1. Remove any deposits from the heat exchanger coils using a suitable non metallic soft brush, then a vacuum cleaner or water sprayed onto the coils. Ensure all electrical components are protected from water (if used). Any water used to clean the heat exchanger will drain to the condensate trap.
2. Check the condition of the combustion chamber insulation panels. Any damaged panels must be replaced.
3. Check the condition of the burner injector in the gas valve outlet, carefully clean with a soft brush if necessary - Do not use a brush with metallic bristles as this might damage the injector. Unscrew and replace the injector should it appear damaged.

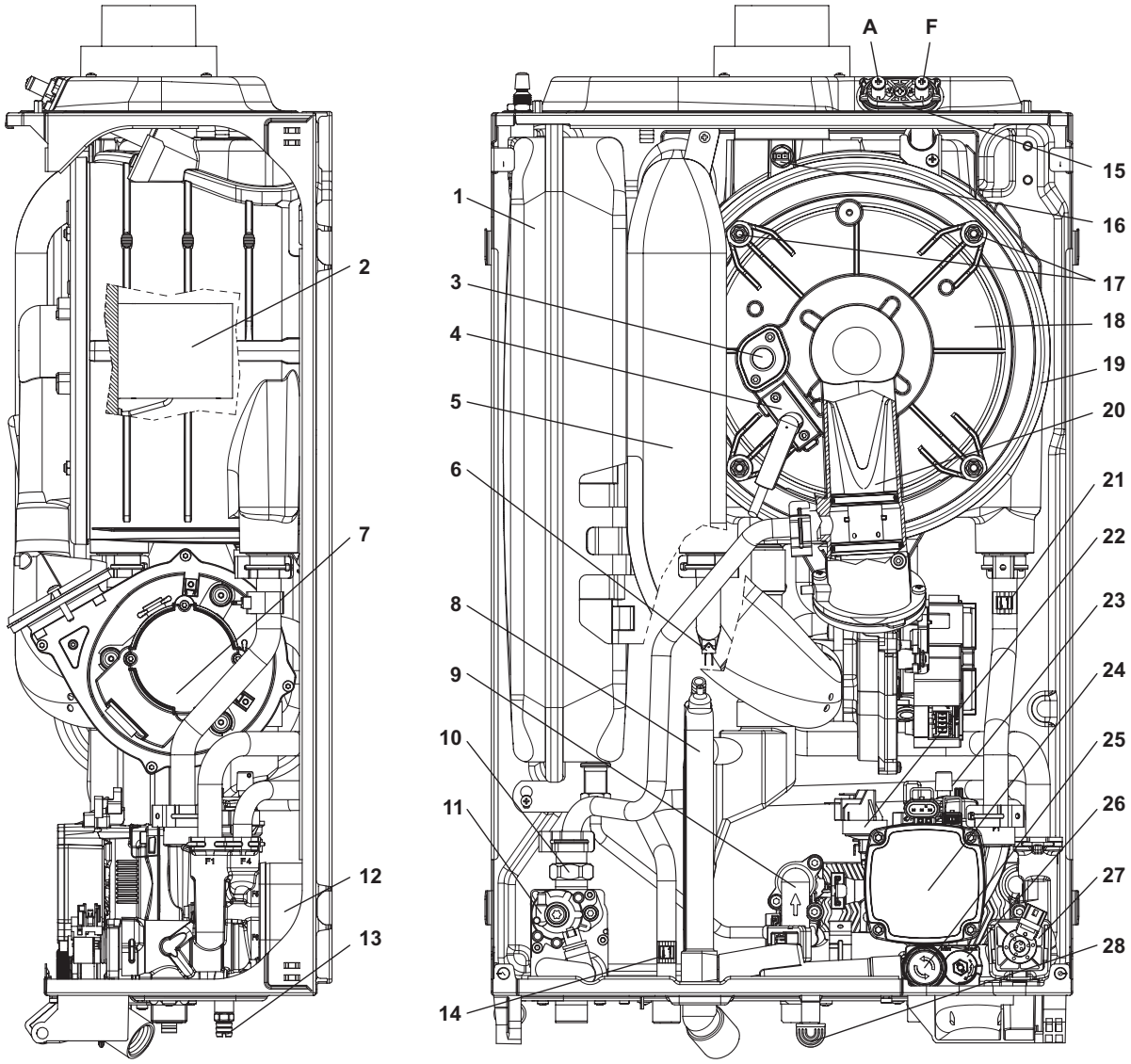

1	Expansion vessel	15	Test points (air A, flue F)
2	Burner	16	Flue temperature sensor
3	Viewing window	17	Four fixing nuts for item 18
4	Ignition/sensing electrodes	18	Combustion chamber front assembly
5	Air supply pipe	19	Primary heat exchanger
6	Primary flow temperature sensor	20	Venturi
7	Fan	21	Primary return temperature sensor
8	Condensate trap	22	Primary pressure switch
9	DHW flow switch	23	Automatic air vent
10	Gas injector	24	Boiler pump
11	Gas valve	25	3 bar safety valve
12	DHW heat exchanger	26	By-pass
13	Boiler drain point	27	Diverter valve
14	DHW temperature sensor	28	Safety valve operation indicator

Fig. 7.6

7.6 RE-ASSEMBLE THE BOILER

1. **Important:** Before replacing the combustion chamber front assembly, pour at least 200 cc of water into the coils of the heat exchanger. This is to ensure the condensate trap is full of water before operating the boiler.
2. Replace the combustion chamber front assembly, ensuring it is correctly located and secure with the four 10 mm nuts previously removed. Replace seals if necessary.
3. Ensure the injector is in position in the gas valve outlet and re-connect the gas pipe securing it in position with the spring clips previously removed.
4. Reconnect the fan wiring plug and air pressure tube.
5. Insert the air inlet pipe into the fan and re-fit the screw securing top of the pipe.
6. Re-fit the ignition lead to the electrode.
7. Check all the connections are sound and re-commission, Sections 6.3 and 6.8.
8. Raise the control panel and clip into place.
9. Check that the insulation on the back of the case front panel is intact and in position (it also acts as a case seal), then place the panel in position over the top pins and secure with the two screws previously removed.
10. Refit the control panel cover and secure in position with the two screws and cover plugs.
11. Check the operation of the boiler. (Refer to Sections 6.5 and 6.6).
12. Return all controls to their original settings.

To ensure correct and safe operation of the appliance, it is essential that any worn or failed components are replaced with only genuine Alpha spare parts. Use of non-genuine Alpha spares could invalidate your warranty and may pose a potential safety hazard.

8 COMPONENT REPLACEMENT

It is the law that any service work must be carried out by a competent person, i.e. Gas Safe registered boiler engineer.

Warning: Before replacing any boiler components, isolate the electrical supply and close the boiler gas service cock. Allow the boiler to cool.

Always test for gas tightness before and after replacing any gas carrying components or disturbing any gas connections.

Always carry out electrical system checks i.e. Earth Continuity, Resistance to Earth, Short Circuit and Polarity with a suitable meter after servicing.

Check the operation of the boiler. (Refer to Sections 6.5 and 6.6).

Ensure that all the controls are returned to their original settings.

8.1 GENERAL ACCESS

Ensure the electrical supply is isolated and the gas supply is off.

Gain access by removing the control panel cover, case front panel and lowering the control panel as described in Section 7.2.

8.2 DRAINING THE BOILER - Fig. 5.4

Isolate the electricity supply and close the boiler gas service cock, see Fig. 5.4. Allow the boiler to cool.

Heating circuit

1. Close the central heating flow and return valves, see Fig. 5.4.
2. Connect a suitable pipe to the drain point, see Figs. 5.4 and 7.6 and route it to a suitable container. Open the drain point.

Hot water circuit

1. Close the mains water inlet valve, see Fig. 5.4.
2. Open all hot taps to allow as much draining of the boiler as possible.

   Note: Some water will remain in the components and care must be taken when removing them.

8.3 IGNITION AND SENSING ELECTRODE - Fig. 7.6

Gain access as described in Section 8.1.

1. Pull off the ignition lead from the electrode.
2. Remove the cap screws securing the electrode to the front of the combustion chamber using a 3 mm allen key and carefully withdraw the electrode.
3. Fit the new electrode assembly with a new gasket and re-assemble in reverse order.
4. Test the boiler, check the ignition and test the combustion as described in Section 7.

8.4 MAIN BURNER

1. Remove the complete burner/fan/air inlet assembly as described in Routine Servicing, Section 7.3.
2. Open the three spring clips (see Fig. 7.5) and carefully lift off the insulation panel to gain access to the burner fixings. It will be necessary to remove the electrode assembly first as described in Section 8.3.
3. Fit the new burner (with a new gasket) and replace the insulation panel, securing it with the three clips.
4. Re-assemble as described in Routine Servicing, Section 7.5.
5. Test the boiler, check the ignition and test the combustion as described in Section 7.

8.5 FAN - Fig. 7.6

Gain access as described in Section 8.1.

1. Remove the single screw securing the top of the air supply pipe and withdraw it from the fan connection.
2. Remove the wiring connector from the fan, support the fan and remove the two screws securing the fan to the air inlet.
3. Remove the gas valve pressure tube from the fan inlet
4. Withdraw the fan assembly forwards.
5. Re-assemble in reverse order.
6. Test the boiler, check the ignition and test the combustion as described in Section 7.

8.6 FLUE TEMPERATURE SENSOR - Fig. 7.6

Gain access as described in Section 8.1.

1. Unplug the wire from the flue sensor.
2. Using a 13 mm spanner, turn the sensor 90° anti-clockwise and withdraw it from the heat exchanger.
3. Fit the new sensor and re-assemble in reverse order.

8.7 FUSE - Fig. 8.1

The fuse is located on the PCB.

1. Gain access to the rear of the control box as described in Section 8.8.
2. Remove the three screws securing the PCB cover and remove cover.
3. Lift out and remove the fuse. Fit a 3.15 AF 250 V (20 mm x 5 mm) fuse as a replacement. Check the spare fuse has the correct value before installing it..
4. Re-assemble in reverse order.

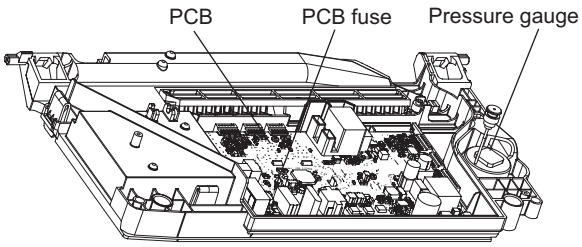

Fig. 8.1

8.8 PCB - Fig. 8.1

Note: The replacement of the gas valve or PCB must be carried out by a Gas Safe registered engineer with the use of a flue analyser.

Gain access as described in Section 8.1.

1. Release the grommet and unplug the lead from the PCB.
2. Remove the three screws securing the PCB cover and remove cover.
3. Remove the PCB retaining screws.
4. Lift the PCB from the control panel and note the connections before unplugging the wire connections.
5. Re-assemble in reverse order. Refer to the wiring diagram in Section 9.1 for connections. When replacing the PCB cover, ensure no wires are trapped and all wiring is secured. Secure cover with three screws - do not over tighten
6. Set the correct parameters for the correct boiler model as described in Section 6.13.
7. Test the boiler.

8.9 GAS VALVE

Note: The replacement of the gas valve or PCB must be carried out by a Gas Safe registered engineer with the use of a flue analyser.

Isolate the boiler gas supply and gain access as described in Section 8.1.

1. Disconnect the electrical plug from the gas valve.
2. Remove the gas pipe retaining clip and remove the pipe.
3. Disconnect the gas valve union beneath the boiler.
4. Remove the two screws from beneath the boiler, disconnect the gas valve pressure tube and lift out the valve assembly.
5. Unscrew the brass union from the top of the gas valve and transfer it to the new gas valve using a new washer.
6. Fit the new assembly and re-assemble in reverse order and test for gas tightness.
7. Light the boiler. (Refer to Commissioning, Section 6.4).
8. Test the boiler, check the ignition and test the combustion as described in Section 6.

8.10 DHW TEMPERATURE SENSOR - Fig. 8.2

Gain access as described in Section 8.1.

1. Unplug the wiring and unclip the sensor from the DHW outlet pipe as required.
2. Re-assemble in reverse order with a new sensor ensuring a good contact between the pipe and sensor.

8.11 CONDENSATE TRAP - Figs. 7.7 and 8.2

Gain access as described in Section 8.1.

Note: Before removing the trap, ensure that the water from the trap can be contained to avoid spillage.

1. Pull the flue drain hose off the top of the condensate trap and pull the rubber condensate hose adapter out of the bottom of the boiler. The cable tie is used for production and can be discarded.
2. Remove the trap fixing screw from the bottom of the boiler and turn the trap to the left to disconnect it from the expansion valve outlet pipe.
3. Lift out the trap being careful not to spill any condense water, remove the trap from the boiler.
4. It is important to clean the trap every time the trap is removed to flush out any deposits from the collection bowl.
   Note: Partially fill the trap before replacing.

8.12 DHW FLOW SWITCH - Fig. 8.2

1. Gain access behind the front casing as described in Section 8.1.
2. Isolate the mains water supply and open all hot taps to drain any water from the boiler.
3. Disconnect the wires from the switch.
4. Below the boiler undo the mains cold water inlet connection union nut and remove the fixing screw from the bottom of the switch.
5. Remove the two 4 mm cap head screws securing the top of the switch and lift upwards to remove.
6. Fit the new switch and re-assemble in reverse order.
7. Visually inspect for leakage after reconnecting the mains cold water supply.

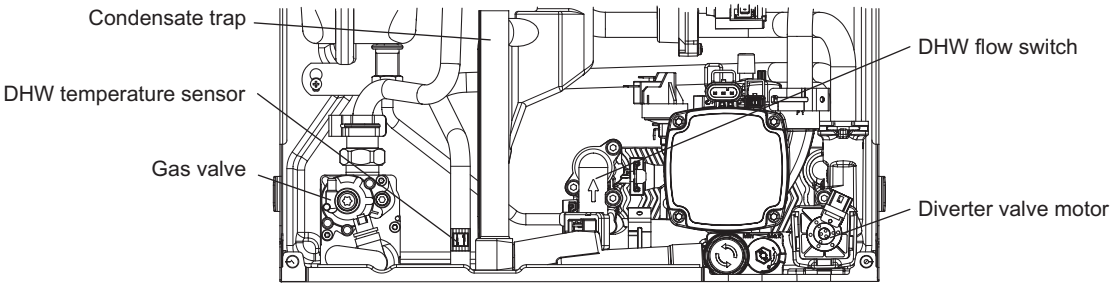

Fig. 8.2

8.13 PRIMARY HEAT EXCHANGER - Fig. 7.6

Gain access and drain the boiler heating circuit as described in Sections 8.1 and 8.2.

1. Remove the condensate trap assembly as described in Section 8.11.
2. Remove the burner as described in Section 7.3.
3. Unplug the connection from the flue temperature sensor and remove the sensor as described in Section 8.6.
4. Disconnect the condensate drain pipe by pulling its rubber connector from the heat exchanger.
5. Unscrew the flue sampling point cap and remove the complete fitting from the top of the case.
6. Disconnect the flue sensor wires and remove the lower retaining screw on the bottom of the heat exchanger..
7. Remove the heating flow and return pipe retaining clips from the primary heat exchanger and pull the pipes downwards from the heat exchanger connections.
8. Lift the heat exchanger upwards and forwards to disconnect it from the bottom bracket and withdraw it from the boiler.
9. Refit the flue temperature sensor.
10. Reassemble in reverse order using the lubricant supplied with the heat exchanger kit.
    Note: Lubricating the seals with soap and water will aid assembly.
11. Refill boiler, pressurise the system and visually inspect for leaks.
12. Test the boiler, check the ignition and test the combustion as described in Section 7.

8.14 PRESSURE GAUGE - Fig. 8.1

Gain access and drain the heating circuit as described in Sections 8.1 and 8.2.

1. Depress the two lugs on the pressure gauge and pull it out of the control panel.
2. Withdraw the retaining clip securing the pressure gauge sensor (just to the left of the automatic air vent) and withdraw the sensor.

   Note: This is a direct sensor, ensure all electrical components are protected from water escape.
3. Remove the main cable grommet in the bottom panel and remove the sensor tube.
4. Fit the new gauge sensor using a new 'O' ring on the connection if necessary.
5. Reassemble in reverse order.
6. Refill and pressurise the system. (Refer to Commissioning, Section 6.1).

8.15 PRIMARY TEMPERATURE SENSORS - Fig. 7.6

Gain access to the boiler as described in Section 8.1.

1. Unplug the wiring and unclip the sensor from the flow or return pipe as required. Re-assemble in reverse order with a new sensor onto the conductive paste ensuring good contact between the pipe and sensor.

8.16 AUTOMATIC AIR VENT - Fig. 7.6

Gain access and drain the boiler heating circuit as described in Sections 8.1 and 8.2.

1. Turn the automatic air vent anticlockwise and lift it out.
2. Insert the new air vent and turn it clockwise to lock it in position.
3. Refill and pressurise the system. (Refer to Commissioning, Section 6.1).

8.17 PUMP HEAD - Fig. 7.6

Gain access and drain the boiler heating circuit as described in Sections 8.1 and 8.2.

1. Disconnect the two wiring connectors from the pump.
2. Using a 4 mm Allen key remove the four socket head screws securing the pump head to the body.
3. Reassemble the new pump head in reverse order, re-connecting the two wiring connectors.
4. Refill and pressurise the system. (Refer to Commissioning, Section 6.1).

8.18 PRIMARY PRESSURE SWITCH - Fig. 7.6

Gain access and drain the boiler heating circuit as described in Sections 8.1 and 8.2.

1. Disconnect the wiring from the pressure switch.
2. Withdraw the retaining clip on the left side of the switch and lift the switch upwards to remove.

   Note: This is a direct component, ensure all electrical components are protected from water escape.
3. Insert a new switch and re-assemble in reverse order.

   Note: When connecting the wiring to the new switch the polarity of the wires is not important.

8.19 SAFETY VALVE - Fig. 7.6

Gain access and drain the boiler heating circuit as described in Sections 8.1 and 8.2.

1. Disconnect the clear plastic tube from the pressure relief valve.
2. Remove the retaining clip securing the expansion relief valve and pull the valve forwards to remove.
3. Re-assemble in reverse order.
4. Refill and pressurise the system. (Refer to Commissioning, Section 6.1).

8.20 DHW HEAT EXCHANGER - Fig. 7.6

Gain access and drain the boiler heating and hot water circuits as described in Sections 8.1 and 8.2.

1. Remove condensate trap as in Section 8.11.
2. Using a 4 mm Allen key remove the two bolts securing the Plate heat exchanger to the hydro block assembly.
3. Slide the heat exchanger to the left hand corner of the boiler and rotate it forwards from its right hand side through the centre of the boiler to remove.
4. Remove and replace the seals in the back of the hydro block housing.
5. Replace in reverse order making sure that the printed writing on the heat exchanger is at the top.
6. Refill and pressurise the system. (Refer to Commissioning, Section 6.1)

8.21 DIVERTER VALVE MOTOR - Fig. 8.2

Switch the boiler to Standby (⏻).

Gain access as described in Section 8.1.

1. Push the clip on the plug and pull the plug from the diverter motor.
2. Lift the motor upwards and forwards to remove from the valve body.
3. Test the boiler in heating and hot water mode to ensure the motor is correctly engaged with the diverter valve spindle.

8.22 DIVERTER VALVE CARTRIDGE - Fig. 8.2

Gain access and drain the boiler heating circuit as described in Sections 8.1 and 8.2.

1. Remove the diverter valve motor as described in Section 8.21.
2. Using the supplied tool and a suitable spanner turn the diverter valve cartridge anticlockwise until its retaining lugs hit the stops.
3. Withdraw the cartridge taking care not to spill any water onto any electrical components.
4. Insert the new cartridge with the locating lug at the top and push firmly into place. Using the supplied tool and a suitable spanner turn the cartridge clockwise until the retaining lugs are locked into position.
5. Pull the diverter pin fully out into the CH position and connect the diverter motor as in Section 8.21.
6. Test the boiler in heating and hot water mode to ensure the motor is correctly engaged with the diverter valve spindle.

8.23 EXPANSION VESSEL - Fig. 7.6

Note: Check that the pressure of the new vessel is 1 bar before it is installed.

Gain access and drain the boiler heating circuit as described in Sections 8.1 and 8.2.

1. Remove the top side panel fixing screw.
2. Disconnect the copper pipe from the bottom of the vessel.
3. Remove the top fixing nut from the air valve.
4. Remove the bottom fixing screw and withdraw the vessel taking care not to spill any water into other boiler components.
5. Re-assemble in reverse order.
6. Refill and pressurise the system. (Refer to Commissioning, Section 6.1).

8.24 COMBUSTION CHAMBER INSULATION

1. Remove the complete burner/fan/air inlet assembly as described in Routine Servicing, Section 7.3.
2. Open the three spring clips (see Fig. 7.5) and carefully lift off the insulation panel. It may be necessary to remove the electrode assembly first as described in Section 8.3.
3. To remove the rear insulation panel, open the four clips and prise out the panel.
4. Fit the new panel(s) and re-assemble in reverse order referring to Routine Servicing, Section 7.5.
5. Test the boiler, check the ignition and test the combustion as described in Section 7.

8.25 ALPHA CONTROLS (if fitted)

Refer to section 5.11 on the connection options for boiler controls.

9 WIRING DIAGRAM

9.1 ILLUSTRATED WIRING DIAGRAM

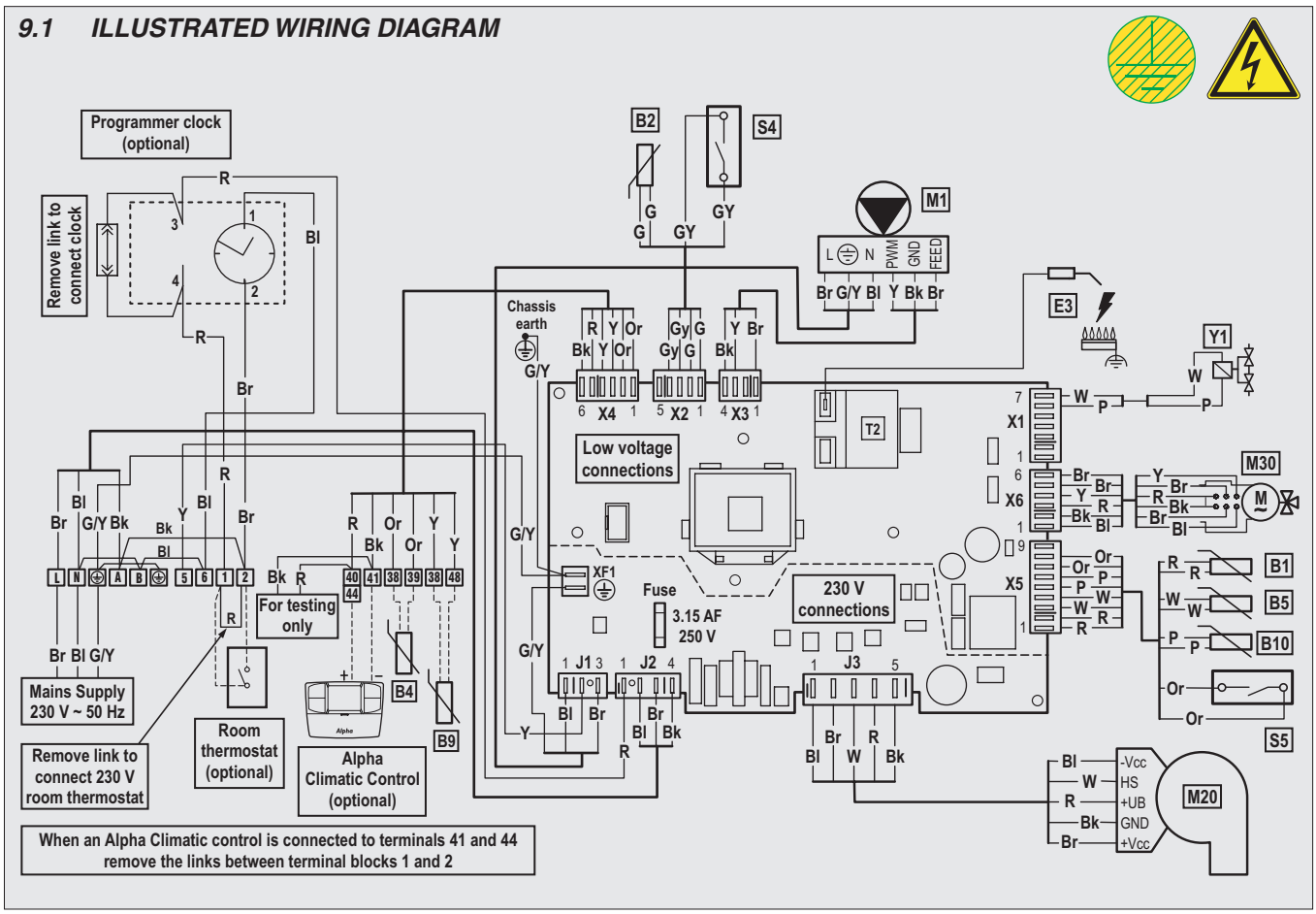

Colour Code

Bk .....Black
Bl .....Blue
Br.....Brown
G.....Green
Gy.....Grey
G/Y ....Green/Yellow
Or.....Orange
P .....Purple
R.....Red
V .....Violet
W .....White
Y .....Yellow

Component identification

B1 .....Flow sensor
B2 .....DHW sensor
B4 .....External sensor (optional)
B5 .....Return sensor
B9 .....DHW inlet sensor or FlowSmart cylinder sensor (optional)
B10 .....Flue sensor
E3 .....Ignition and detection electrode
M1.....Boiler pump
M20.....Fan
M30.....3-way valve motor
S4 .....DHW flow switch
S5 .....System pressure switch
T1 .....Transformer
T2 .....Ignition transformer
Y1 .....Gas valve

10 ERROR CODES AND FAULT FINDING

10.1 CARRY OUT INITIAL FAULT FINDING CHECKS

In the event of a suspected functional fault with the boiler, carry out initial fault finding checks to establish the cause.

1. Check the correct gas, electrical and water supplies are available at the boiler.
2. Check the boiler system pressure is in the green area when cold.
3. Check that any boiler controls fitted are working and in an 'ON' position.
4. Carry out electrical supply and connection checks and check all fuses.

Where an error code is displayed use the following tables to identify the fault and possible causes.

10.2 ERROR CODES AND FAULT FINDING

If any fault or anomaly persists, contact Alpha Heating Innovation Technical Helpline.

The history of errors can be viewed in the 'INFO' menu - d9

Error code	Fault	Fault description	Possible causes
01	Ignition failure	Flame not detected during ignition sequence	Gas supply Check ignition/sensing electrode Ignition generator or lead Gas valve operation Check PCB and wire connections Flue restriction or blockage
02	Overheat boiler lock out	Overheat sensor has activated	Pump or restricted flow problem Blocked heat exchanger Air in heat exchanger Check external valves/circuit *
03	High flue temperature	Flue sensor intervention (flue temperature too high)	Blocked or restricted primary flow Heat exchanger air flow blocked Flue restriction Flue sensor fault Air in primary heat exchanger
04	Gas valve electrical connection fault	Gas valve wiring circuit fault detected	Gas valve lead connection fault Faulty gas valve Faulty PCB
05	CH flow sensor fault	Incorrect flow sensor resistance value	Flow sensor wire connections or sensor faulty
06	DHW sensor fault	DHW sensor resistance value is incorrect	DHW sensor wiring connection or sensor faulty
08	Max. number of resets	Maximum number of resets reached (5)	Refer to fault history codes (INFO menu d9), to reset by turning the boiler off and on. If it will not clear replace PCB
10	Primary system pressure low	Primary pressure switch has operated	Check expansion vessel pressure (1 bar) Leak in system Expansion relief valve operated Primary pressure switch
12	DHW inlet sensor fault	Optional DHW inlet sensor resistance out of range	Check sensor wiring and connections Check sensor resistance
15	Incorrect configuration	Incorrect hydraulic configuration There is an inconsistency between the settings and signals received from the PCB	Check the settings of the 'A' family parameters
16	Fan fault	Fan wiring fault or fan faulty	Check fan wiring connections Fan fault PCB fault
20	Flame sensing fault	False flame detection Flame detected but gas valve is not open	Check flame sensing electrode and lead Electrical short circuit on sensing wires PCB fault
22	PCB fault	PCB software error	Replace PCB
23	Return sensor fault	Return sensor resistance out of range	Check sensor wiring and connections Check sensor resistance
24	Control panel button fault	Control panel button stuck in the on position	Check for jammed control panel buttons Check for jammed PCB buttons

* When external zone valves are fitted an external by-pass must also be installed.

Error code	Fault	Fault description	Possible causes
25	PCB fault	PCB fault - software error	Replace PCB
27	Primary circuit overheat	Insufficient circulation in primary circuit causing overheating	Air in heat exchanger Isolation/system valves closed Check wiring/power to pump Pump seized/blocked Pump failed
29	Flue sensor fault	Flue sensor resistance out of range	Check sensor wiring and connections Check sensor resistance
31	Loss of communication with external control (Alpha Climatic)	Loss of connection between the boiler and Alpha Climatic control unit	Remote control or receiver connection wiring Distance or interference of RF signal Remote control or receiver fault (Check batteries if using RF controller)
37	Low supply voltage	Insufficient supply voltage to operate boiler	Check mains power supply Check for bad cable connections etc
38	Loss of flame rectification	Flame detected but signal lost. Ignition retries after fan purge	Check flame sensing electrode and lead Check for flue gas recirculation Check the gas valve Check flue system and termination Check gas supply/working pressure Check/adjust combustion settings Check burner earth connection
43	Loss of flame rectification	Repeated loss of flame signal during operation This fault can occur if the flue is exposed to high wind conditions (shown as E38 in the fault code history in the INFO menu)	Check as above for error code 38
45	High ΔT	The boiler detects a sudden, unexpected increase in ΔT between the flow sensor and the system return sensor	Burner input is limited for boiler protection, and once the right ΔT is restored, the boiler resumes regular operation. Make sure there is water circulating in the boiler, that the pump is configured according to the system requirements and that the return sensor is correct.
47	Reduced burner output	Flue thermostat has sensed high flue gas temperature (110°C) and reduced the burner output to prevent damage. If the temperature continues to rise the boiler will lock out and E03 will be displayed	Air in heat exchanger Restricted primary flow Heat exchanger air flow blocked Flue restriction Flue sensor fault Pump fault
51	Climatic RF communication fault	Error between communication of the Climatic transmitter and boiler receiver	Batteries require replacing
60	Pump fault	The pump is stuck or there is an electrical pump fault	Check the pump operation, it may be necessary to free the pump shaft Check the pump wiring Replace the pump
61	Air in the pump	Restricted CH flow due to air or a circuit restriction	Check Flow and Return valves are open Check for correct system pressure Check the system is purged properly
70	Return/flow sensor error (return reading higher than flow)	Possible wiring fault, sensors incorrectly fitted, system blocked	Check sensor wiring and connections Check sensor resistance Check circulation
75	Return/flow sensor fault	Possible failure of one or both sensors	Check sensor wiring and connections Check sensor resistance
76	Return/flow sensor fault	Possible failure of one or both sensors	Check sensor wiring and connections Check sensor resistance

Error code	Fault	Fault description	Possible causes
Sr	Service reminder	Service reminder count down (0 - 36 months) has reached zero See Section 6.13, parameter P6 **Note:** E97 is also shown on Climatic controller, if used	**Note:** The 'Sr' code will **not** stop the boiler functioning **Note:** Pressing the **RESET** button will clear the 'Sr' code for 24 hrs to allow the display to be read To permanently reset the error 'Sr' / E97 1. Enter the parameter menu using the password 69. See Section 6.13 2. Parameter P6 will show 0 3. Set P6 to any value above zero, save by pressing the mode button ( ) and wait for '88' to be displayed as confirmation 4. Then set P6 to 0, save by pressing the mode button ( ) and wait for '88' to be displayed as confirmation 5. Now set the parameter P6 at the number of months to the next service reminder (i.e. 12 for one year). Save by pressing the mode button ( ) and wait for '88' to be displayed as confirmation
■	Boiler completely turned off	Screen only shows a single dot to indicate boiler is completely off	Press mode button ( ) for 2 seconds then release. Boiler display will return and you can select an operating mode
'Blank screen'	Boiler fused blown	Fuse on main PCB blown	Incorrect power supply Seized or sticking pump - Check pump for free rotation Boiler component drawing excessive current. Check individual components in turn
	Pump with UPM3 W3 electronics ONLY Red pump LED	Pump fault	There can be three possible causes for this anomaly: 1. **Low power supply voltage.** When the minimum voltage is reached after about two seconds, the LED turns from red to green to red and the pump stops. Wait for the power supply voltage to rise. When the pump restarts the LED will turn green again with a delay of about one second **Note:** The flow rate decreases as the supply voltage decreases 2. **Seized rotor.** After about four seconds of the seized pump trying to start the LED turns from green to red. Carefully rotate the screw in the middle of the pump head to manually release the rotor. Circulation starts up immediately the rotor is freed and after about ten seconds the LED turns from red to green 3. **Electrical fault.** Pump, wiring or PCB fault. Check the indicated components
	Pump with UPM4 electronics ONLY Symbol ⚠ with steady red light	Pump fault	Possible causes for this anomaly: 1. **Low power supply voltage** 2. **Seized rotor** 3. **Electrical fault**

11 SHORT PARTS LIST

Description	Alpha Pt. No.
Diverter cartridge	3.025230
Pressure gauge	1.034600
Condensate trap	1.039244
Bottom condensate trap connection	1.023581
Flow/Return sensor	1.039476
DHW temperature sensor	1.039477
Electrode	1.039673
Electrode gasket	1.030251
Flue turret with seals	3.027702
DHW flow switch	1.035365
Pump head motor	1.038162
Primary heat exchanger assembly - 28	3.027697
Primary heat exchanger assembly - 33	3.027698
Primary heat exchanger assembly - 38	3.031018
Burner - 28	1.040669
Burner - 33	1.040670
Burner - 38	1.043043
Burner gasket	1.025910
Diverter valve motor	1.033918
Pressure switch	1.027277
DHW heat exchanger - 28 with seals	3.022783
DHW heat exchanger - 33 with seals	3.021693
DHW heat exchanger - 38 with seals	3.022784
Main PCB	1.037031
Safety valve 3 bar	1.028561
Gas valve	1.039944
Automatic air vent with 'O'-ring seal	1.027110
Relief valve to condensate connecting pipe	1.037890
Expansion vessel	1.039208
Fan - 28 and 33	3.027699
Fan - 38	3.031017
Flue sampling point cap	3.026794
Complete boiler seal kit	3.027771
Hydraulic circuit seal kit	3.025323
Complete heat exchanger seal kit	3.027772
Gas pipe to fan manifold	1.039140
Gas pipe 'O' ring	1.037816
Clip - Flow/return pipe to heat exchanger	1.026763
Clip - Gas pipe connections	1.020393
Boiler wall bracket	2.015350
Boiler connection kit	3.024893
Boiler accessory box complete	3.026880
Wall template	1.039776
Burner front insulation panel (71.5 dia.) - 38 and 33	1.039141
Burner front insulation panel (75 dia.) - 38	1.040668
Flue sensor	1.024296
Rear combustion insulation panel	1.040351

12 ENERGY CLASSIFICATION

12.1 TECHNICAL PARAMETERS FOR MIXED BOILERS (IN COMPLIANCE WITH REGULATION 811/2013)

The values in the following tables refer to the maximum heating output.

Model(s):			E-Tec Plus 28				
Condensing boiler:			YES				
Low-temperature boiler:			NO				
B1 boiler:			NO				
Cogeneration space heater:			NO	Equipped with a supplementary heater:			NO
Combination heater:			YES				
Item	Symbol	Value	Unit	Item	Symbol	Value	Unit
Rated heat output	P_n	24	kW	Seasonal space heating energy efficiency	η_s	93	%
For boiler space heaters and boiler combination heaters: useful heat output				For boiler space heaters and boiler combination heaters: Useful efficiency			
At rated heat output and high temperature regime (*)	P_4	24.1	kW	At rated heat output and high temperature regime (*)	η_4	87.8	%
At 30% of rated heat output and low temperature regime (**)	P_1	8.0	kW	At 30% of rated heat output and low temperature regime (**)	η_1	97.5	%
Auxiliary electricity consumption				Other items			
At full load	el_{max}	0.010	kW	Standby heat loss	P_{stby}	0.057	kW
At part load	el_{min}	0.005	kW	Ignition burner power consumption	P_{ign}	0.000	kW
In standby mode	P_{SB}	0.002	kW	Emissions of nitrogen oxides	NO_X	31	mg / kWh
For combination heaters:							
Declared load profile	XL			Water heating energy efficiency	η_{WH}	87	%
Daily electricity consumption	Q_{elec}	0.122	kWh	Daily fuel consumption	Q_{fuel}	22.406	kWh
Contact details	Alpha Therm Ltd., Nepicar House, Wrotham Heath, Kent. TN15 7RS						

(*) High temperature regime means 60°C return temperature at heater inlet and 80°C feed temperature at heater outlet.
(**) Low temperature means for condensing boilers 30°C, for low-temperature boilers 37°C and for other heaters 50°C return temperature.

Model(s):			E-Tec Plus 33				
Condensing boiler:			YES				
Low-temperature boiler:			NO				
B1 boiler:			NO				
Cogeneration space heater:			NO	Equipped with a supplementary heater:			NO
Combination heater:			YES				
Item	Symbol	Value	Unit	Item	Symbol	Value	Unit
Rated heat output	P_n	28	kW	Seasonal space heating energy efficiency	η_s	93	%
For boiler space heaters and boiler combination heaters: useful heat output				For boiler space heaters and boiler combination heaters: Useful efficiency			
At rated heat output and high temperature regime (*)	P_4	28.0	kW	At rated heat output and high temperature regime (*)	η_4	87.8	%
At 30% of rated heat output and low temperature regime (**)	P_1	9.3	kW	At 30% of rated heat output and low temperature regime (**)	η_1	97.6	%
Auxiliary electricity consumption				Other items			
At full load	el_{max}	0.012	kW	Standby heat loss	P_{stby}	0.057	kW
At part load	el_{min}	0.006	kW	Ignition burner power consumption	P_{ign}	0.000	kW
In standby mode	P_{SB}	0.002	kW	Emissions of nitrogen oxides	NO_X	27	mg / kWh
For combination heaters:							
Declared load profile	XL			Water heating energy efficiency	η_{WH}	87	%
Daily electricity consumption	Q_{elec}	0.131	kWh	Daily fuel consumption	Q_{fuel}	22.362	kWh
Contact details	Alpha Therm Ltd., Nepicar House, Wrotham Heath, Kent. TN15 7RS						

(*) High temperature regime means 60°C return temperature at heater inlet and 80°C feed temperature at heater outlet.
(**) Low temperature means for condensing boilers 30°C, for low-temperature boilers 37°C and for other heaters 50°C return temperature.

Model(s):			E-Tec Plus 38				
Condensing boiler:			YES				
Low-temperature boiler:			NO				
B1 boiler:			NO				
Cogeneration space heater:			NO	Equipped with a supplementary heater:			NO
Combination heater:			YES				
Item	Symbol	Value	Unit	Item	Symbol	Value	Unit
Rated heat output	P_n	32	kW	Seasonal space heating energy efficiency	η_s	93	%
For boiler space heaters and boiler combination heaters: useful heat output				For boiler space heaters and boiler combination heaters: Useful efficiency			
At rated heat output and high temperature regime (*)	P_4	32.0	kW	At rated heat output and high temperature regime (*)	η_4	88.1	%
At 30% of rated heat output and low temperature regime (**)	P_1	10.6	kW	At 30% of rated heat output and low temperature regime (**)	η_1	97.7	%
Auxiliary electricity consumption				Other items			
At full load	el_{max}	0.042	kW	Standby heat loss	P_{stby}	0.055	kW
At part load	el_{min}	0.007	kW	Ignition burner power consumption	P_{ign}	0.000	kW
In standby mode	P_{SB}	0.002	kW	Emissions of nitrogen oxides	NO_X	34	mg / kWh
For combination heaters:							
Declared load profile	XL			Water heating energy efficiency	η_{WH}	85	%
Daily electricity consumption	Q_{elec}	0.124	kWh	Daily fuel consumption	Q_{fuel}	23.108	kWh
Contact details	Alpha Therm Ltd., Nepicar House, Wrotham Heath, Kent. TN15 7RS						

(*) High temperature regime means 60°C return temperature at heater inlet and 80°C feed temperature at heater outlet.
(**) Low temperature means for condensing boilers 30°C, for low-temperature boilers 37°C and for other heaters 50°C return temperature.

12.2 PRODUCT DATA SHEET (IN COMPLIANCE WITH REGULATION 811/2013)

E-Tec Plus 28

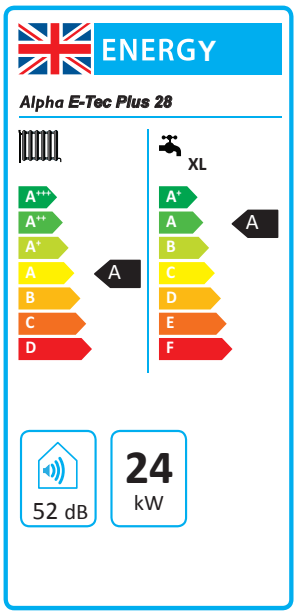

E-Tec Plus 33

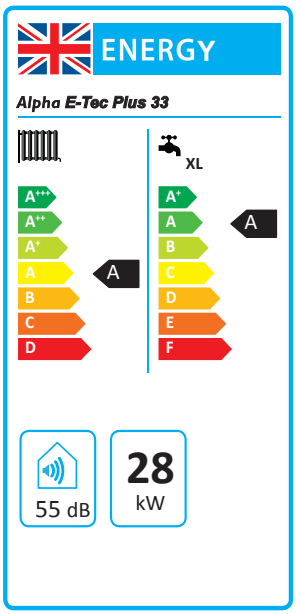

E-Tec Plus 38

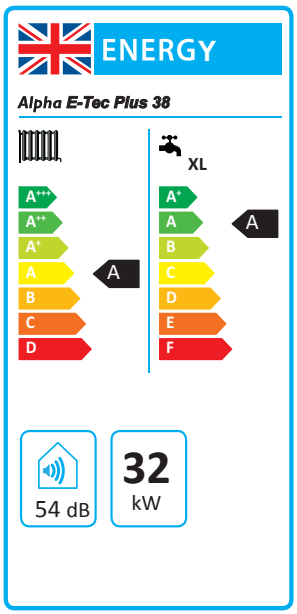

Parameter	Value		
	E-Tec Plus 28	E-Tec Plus 33	E-Tec Plus 38
Yearly energy consumption for the heating function (QHE)	44.1 GJ	51 GJ	50 GJ
Yearly electricity consumption for the domestic hot water function (AEC)	27 kWh	29 kWh	27 kWh
Yearly fuel consumption for the domestic hot water function (AFC)	17 GJ	17 GJ	18 GJ
Seasonal room heating yield (ηs)	93 %	93 %	93 %
Domestic hot water production yield (ηwh)	87 %	87 %	85 %

12.3 FACSIMILE FOR FILLING IN ROOM HEATING SYSTEM ASSEMBLY CHART

Seasonal space heating energy efficiency of boiler — 1 ‘I’ %

Temperature control
From fiche of temperature control

Class I = 1 %, Class II = 2 %,
Class III = 1.5 %, Class IV = 2 %,
Class V = 3 %, Class VI = 4 %,
Class VII = 3.5 %, Class VIII = 5 %

+ 2 %

Supplementary boiler
From fiche of boiler

Seasonal space heating energy afficiency (in %)

(☐ - ‘I’) x 0,1 = ± 3 %

Solar contribution
From fiche of solar device

Collector size (in m²) — Tank volume (in m³) — Collector efficiency (in %) — Tank rating: A* = 0.95, A = 0.91, B = 0.86, C = 0.83, D-G = 0.81

(‘III’ x ☐ + ‘IV’ x ☐) x (0.9 x (☐ / 100) x ☐ = + 4 %

Supplementary heat pump
From fiche of heat pump

Seasonal space heating energy afficiency (in %)

(☐ - ‘I’) x ‘II’ = + 5 %

Solar contribution AND Supplementary heat pump

Select smaller value

0.5 x 4 ☐ O 0.5 x 5 ☐ = - 6 %

Seasonal space heating energy efficiency of package — 7 %

Seasonal space heating energy efficiency class of package

G	F	E	D	C	B	A	A+	A++	A+++
< 30 %	≥ 30 %	≥ 34 %	≥ 36 %	≥ 75 %	≥ 82 %	≥ 90 %	≥ 98 %	≥ 125 %	≥ 150 %

Boiler and supplementary heat pump installed with low temperature heat emitters at 35°C?

From fiche of heat pump 7 ☐ + (50 x ‘II’) = ☐ %

The energy efficiency of the package of products provided for in this fiche may not correspond to its actual energy efficiency once installed in a building, as the efficiency is influenced by further factors such as heat loss in the distribution system and the dimensioning of the products in relation to building size and characteristics.

12.4 FACSIMILE FOR FILLING IN DOMESTIC HOT WATER PRODUCTION SYSTEM ASSEMBLY CHART

Water heating energy efficiency of combination heater ❶ ['I'] %

Declared load profile: [ ]

Solar contribution

From fiche of solar device

(1.1 x 'I' - 10 %) x 'II' - ['III'] - 'I' = + ❷ [ ] %

Auxiliary electricity

Water heating energy efficiency of package under average climate ❸ [ ] %

Water heating energy efficiency class of package under average climate

	G	F	E	D	C	B	A	A+	A++	A+++
M	< 27 %	≥ 27 %	≥ 30 %	≥ 33 %	≥ 36 %	≥ 39 %	≥ 65 %	≥ 100 %	≥ 130 %	≥ 163 %
L	< 27 %	≥ 27 %	≥ 30 %	≥ 34 %	≥ 37 %	≥ 50 %	≥ 75 %	≥ 115 %	≥ 150 %	≥ 188 %
XL	< 27 %	≥ 27 %	≥ 30 %	≥ 35 %	≥ 38 %	≥ 55 %	≥ 80 %	≥ 123 %	≥ 160 %	≥ 200 %
XXL	< 28 %	≥ 28 %	≥ 32 %	≥ 36 %	≥ 40 %	≥ 60 %	≥ 85 %	≥ 131 %	≥ 170 %	≥ 213 %

Water heating energy efficiency under colder and warmer climate conditions

Colder : ❸ [ ] - 0.2 x ❷ [ ] = [ ] %

Warmer : ❸ [ ] + 0.4 x ❷ [ ] = [ ] %

The energy efficiency of the package of products provided for in this fiche may not correspond to its actual energy efficiency once installed in a building, as the efficiency is influenced by further factors such as heat loss in the distribution system and the dimensioning of the products in relation to building size and characteristics.

12.5 ROOM HEATING SYSTEM ASSEMBLY CHART

Seasonal space heating energy efficiency of boiler ____ % (1)

Temperature control
From fiche of temperature control

Class I = 1 %, Class II = 2 %,
Class III = 1.5 %, Class IV = 2 %,
Class V = 3 %, Class VI = 4 %,
Class VII = 3.5 %, Class VIII = 5 %

+ ____ % (2)

Supplementary boiler
From fiche of boiler

Seasonal space heating energy afficiency (in %)

(____ - _____) x 0,1 = ± ____ % (3)

Solar contribution
From fiche of solar device

Collector size (in m²) | Tank volume (in m³) | Collector efficiency (in %) | Tank rating: A* = 0.95, A = 0.91, B = 0.86, C = 0.83, D-G = 0.81

(____ x ____ + ____ x ____) x (0,9 x (____ / 100) x ____ = + ____ % (4)

Supplementary heat pump
From fiche of heat pump

Seasonal space heating energy afficiency (in %)

(____ - _____) x _____ = + ____ % (5)

Solar contribution AND Supplementary heat pump

Select smaller value

0.5 x ____ (4) O 0.5 x ____ (5) = - ____ % (6)

Seasonal space heating energy efficiency of package ____ % (7)

Seasonal space heating energy efficiency class of package

G	F	E	D	C	B	A	A+	A++	A+++
< 30 %	≥ 30 %	≥ 34 %	≥ 36 %	≥ 75 %	≥ 82 %	≥ 90 %	≥ 98 %	≥ 125 %	≥ 150 %

Boiler and supplementary heat pump installed with low temperature heat emitters at 35°C?

From fiche of heat pump ____ (7) + (50 x _____) = ____ %

The energy efficiency of the package of products provided for in this fiche may not correspond to its actual energy efficiency once installed in a building, as the efficiency is influenced by further factors such as heat loss in the distribution system and the dimensioning of the products in relation to building size and characteristics.

12.6 PARAMETERS FOR FILLING IN ASSEMBLY CHART

Parameter	E-Tec Plus 28	E-Tec Plus 33	E-Tec Plus 38
'I'	93	93	93
'II'	*	*	*
'III'	1.11	0.95	0.84
'IV'	0.44	0.37	0.33

* *To be established by means of table 5 of Regulation 811/2013 in case of "assembly" including a heat pump to integrate the boiler. In this case the boiler must be considered as the main appliance of the assembly.*

12.7 DOMESTIC HOT WATER PRODUCTION SYSTEM ASSEMBLY CHART

Water heating energy efficiency of combination heater ❶ _____ %

Declared load profile: ☐

Solar contribution

From fiche of solar device

Auxiliary electricity

(1.1 x _____ - 10 %) x _____ - ____ - _____ = + ❷ _____ %

Water heating energy efficiency of package under average climate ❸ _____ %

Water heating energy efficiency class of package under average climate

	G	F	E	D	C	B	A	A+	A++	A+++
M	< 27 %	≥ 27 %	≥ 30 %	≥ 33 %	≥ 36 %	≥ 39 %	≥ 65 %	≥ 100 %	≥ 130 %	≥ 163 %
L	< 27 %	≥ 27 %	≥ 30 %	≥ 34 %	≥ 37 %	≥ 50 %	≥ 75 %	≥ 115 %	≥ 150 %	≥ 188 %
XL	< 27 %	≥ 27 %	≥ 30 %	≥ 35 %	≥ 38 %	≥ 55 %	≥ 80 %	≥ 123 %	≥ 160 %	≥ 200 %
XXL	< 28 %	≥ 28 %	≥ 32 %	≥ 36 %	≥ 40 %	≥ 60 %	≥ 85 %	≥ 131 %	≥ 170 %	≥ 213 %

Water heating energy efficiency under colder and warmer climate conditions

Colder: ❸ _____ - 0.2 x ❷ _____ = _____ %

Warmer : ❸ _____ + 0.4 x ❷ _____ = _____ %

The energy efficiency of the package of products provided for in this fiche may not correspond to its actual energy efficiency once installed in a building, as the efficiency is influenced by further factors such as heat loss in the distribution system and the dimensioning of the products in relation to building size and characteristics.

12.8 PARAMETERS FOR FILLING IN DHW PACKAGE ASSEMBLY CHART

Parameter	E-Tec Plus 28	E-Tec Plus 33	E-Tec Plus 38
'I'	87	87	85
'II'	*	*	*
'III'	*	*	*

** To be determined according to Regulation 811/2014 and transient calculation methods as per Notice of the European Community no. 207/2013.*

GAS BOILER SYSTEM COMMISSIONING CHECKLIST & WARRANTY VALIDATION RECORD

Address:					
Boiler make and model:					
Boiler serial number:					
Commissioned by (PRINT NAME):		Gas Safe registration number:			
Company name:		Telephone number:			
Company email:		Company address:			
				Commissioning date:	
Heating and hot water system complies with the appropriate Building Regulations?				Yes	
Optional: Building Regulations Notification Number (if applicable):					
Time, temperature control and boiler interlock provided for central heating and hot water				Yes	
Boiler Plus requirements (tick the appropriate box(s))					
Boiler Plus option chosen for combination boiler in ENGLAND		Weather compensation		Smart thermostat with automisation and optimisation	
		Load compensation		Flue Gas Heat Recovery	
Time and temperature control to hot water	Cylinder thermostat and programmer/timer			Combination boiler	
Zone valves	pre-existing		Fitted		Not required
Thermostatic radiator valves	pre-existing		Fitted		Not required
Automatic bypass to system	pre-existing		Fitted		Not required
Underfloor heating	pre-existing		Fitted		Not required
Water quality					
The system has been flushed, cleaned and a suitable inhibitor applied upon final fill, in accordance with BS7593 and boiler manufacturers' instructions				Yes	
What system cleaner was used?		Brand:		Product:	
What inhibitor was used?		Brand:		Product:	
Primary water system filter	pre-existing		Fitted		Not required
CENTRAL HEATING MODE measure and record (as appropriate)					
Gas rate (for combination boilers complete DHW mode gas rate)		m^3/hr	or	ft^3/hr	
Central heating output left at factory settings?		Yes		No	
If no, what is the maximum central heating output selected?				kW	
Dynamic gas inlet pressure				mbar	
Central heating flow temperature				°C	
Central heating return temperature				°C	
System correctly balanced/rebalanced?				Yes	
COMBINATION BOILERS ONLY					
Is the installation in a hard water area (above 200ppm)?		Yes		No	
Water scale reducer/softener	pre-existing		Fitted		Not required
What type of scale reducer/softener has been fitted?		Brand:		Product:	
Water meter fitted?		Yes		No	
If yes- DHW expansion vessel	pre-existing		Fitted		Not required
Pressure reducing valve	pre-existing		Fitted		Not required
DOMESTIC HOT WATER MODE Measure and record					
Gas rate		m^3/hr	or	ft^3/hr	
Dynamic gas inlet pressure at maximum rate				mbar	
Cold water inlet temperature				°C	
Hot water has been checked at all outlets		Yes		Temperature	°C
CONDENSATE DISPOSAL					
The condensate drain has been installed in accordance with the manufacturers' instructions and/or BS5546/BS6798				Yes	
Point of termination		Internal		External (only where internal termination impractical)	
Method of disposal		Gravity		Pumped	
ALL INSTALLATIONS					
Record the following	At max rate:	CO ppm	CO_2 %	CO/CO_2 Ratio	
	At min rate (where possible)	CO ppm	CO_2 %	CO/CO_2 Ratio	
Where possible, has a flue integrity check been undertaken in accordance with manufacturers' instructions, and readings are correct?				Yes	
The operation of the boiler and system controls have been demonstrated to and understood by the customer				Yes	
The manufacturers' literature, including Benchmark Checklist and Service Record, has been explained and left with the customer				Yes	
Commissioning Engineer's signature					
Customer's signature (To confirm satisfactory demonstration and receipt of manufacturers' literature)					

* All installations in England and Wales must be notified to Local Authority Building Control (LABC) either directly or through a Competent Persons Scheme. A Building Regulations Compliance Certificate will then be issued to the customer.

© Heating and Hotwater Industry Council (HHIC)

benchmark COLLECTIVE MARK
THE MARK OF QUALITY FOR THE INSTALLATION, COMMISSIONING AND SERVICING OF DOMESTIC HEATING AND HOT WATER SYSTEMS

www.centralheating.co.uk

SERVICE & INTERIM BOILER WORK RECORD

It is recommended that your boiler and heating system are regularly serviced and maintained, in line with manufacturers' instructions, and that the appropriate service / interim work record is completed.

Service provider

When completing a service record (as below), please ensure you have carried out the service as described in the manufacturers' instructions. Always use the manufacturers' specified spare parts.

SERVICE/INTERIM WORK ON BOILER delete as appropriate			Date:	
Engineer name:		Company name:		
Telephone Nº:		Gas Safe registration Nº:		
Max rate	CO ppm	CO_2 %	CO/CO_2	
Min rate	CO ppm	CO_2 %	CO/CO_2	
Where possible, has a flue integrity check been undertaken in accordance with manufacturers' instructions, and readings are correct?"			yes	
Gas rate:	m^3/h	OR	ft^3/h	
Were parts fitted? delete as appropriate		Yes	No	
Parts fitted:				
System inhibitor concentration has been checked and appropriate action taken, in accordance with BS 7593 and boiler manufacturers' instructions. *			yes	n/a
Comments:				
Signature:				

*A System inhibitor efficacy test is required on every annual service in accordance with the manufacturers' instructions and BS 7593. It is only acceptable to not have undertaken this if the service engineers attendance visit was in between annual services to attend a non-water facing component.

SERVICE/INTERIM WORK ON BOILER delete as appropriate			Date:	
Engineer name:		Company name:		
Telephone Nº:		Gas Safe registration Nº:		
Max rate	CO ppm	CO_2 %	CO/CO_2	
Min rate	CO ppm	CO_2 %	CO/CO_2	
Where possible, has a flue integrity check been undertaken in accordance with manufacturers' instructions, and readings are correct?"			yes	
Gas rate:	m^3/h	OR	ft^3/h	
Were parts fitted? delete as appropriate		Yes	No	
Parts fitted:				
System inhibitor concentration has been checked and appropriate action taken, in accordance with BS 7593 and boiler manufacturers' instructions. *			yes	n/a
Comments:				
Signature:				

*A System inhibitor efficacy test is required on every annual service in accordance with the manufacturers' instructions and BS 7593. It is only acceptable to not have undertaken this if the service engineers attendance visit was in between annual services to attend a non-water facing component.

SERVICE/INTERIM WORK ON BOILER delete as appropriate			Date:	
Engineer name:		Company name:		
Telephone Nº:		Gas Safe registration Nº:		
Max rate	CO ppm	CO_2 %	CO/CO_2	
Min rate	CO ppm	CO_2 %	CO/CO_2	
Where possible, has a flue integrity check been undertaken in accordance with manufacturers' instructions, and readings are correct?"			yes	
Gas rate:	m^3/h	OR	ft^3/h	
Were parts fitted? delete as appropriate		Yes	No	
Parts fitted:				
System inhibitor concentration has been checked and appropriate action taken, in accordance with BS 7593 and boiler manufacturers' instructions. *			yes	n/a
Comments:				
Signature:				

*A System inhibitor efficacy test is required on every annual service in accordance with the manufacturers' instructions and BS 7593. It is only acceptable to not have undertaken this if the service engineers attendance visit was in between annual services to attend a non-water facing component.

SERVICE/INTERIM WORK ON BOILER delete as appropriate			Date:	
Engineer name:		Company name:		
Telephone Nº:		Gas Safe registration Nº:		
Max rate	CO ppm	CO_2 %	CO/CO_2	
Min rate	CO ppm	CO_2 %	CO/CO_2	
Where possible, has a flue integrity check been undertaken in accordance with manufacturers' instructions, and readings are correct?"			yes	
Gas rate:	m^3/h	OR	ft^3/h	
Were parts fitted? delete as appropriate		Yes	No	
Parts fitted:				
System inhibitor concentration has been checked and appropriate action taken, in accordance with BS 7593 and boiler manufacturers' instructions. *			yes	n/a
Comments:				
Signature:				

*A System inhibitor efficacy test is required on every annual service in accordance with the manufacturers' instructions and BS 7593. It is only acceptable to not have undertaken this if the service engineers attendance visit was in between annual services to attend a non-water facing component.

SERVICE/INTERIM WORK ON BOILER delete as appropriate			Date:	
Engineer name:		Company name:		
Telephone Nº:		Gas Safe registration Nº:		
Max rate	CO ppm	CO_2 %	CO/CO_2	
Min rate	CO ppm	CO_2 %	CO/CO_2	
Where possible, has a flue integrity check been undertaken in accordance with manufacturers' instructions, and readings are correct?"			yes	
Gas rate:	m^3/h	OR	ft^3/h	
Were parts fitted? delete as appropriate		Yes	No	
Parts fitted:				
System inhibitor concentration has been checked and appropriate action taken, in accordance with BS 7593 and boiler manufacturers' instructions. *			yes	n/a
Comments:				
Signature:				

*A System inhibitor efficacy test is required on every annual service in accordance with the manufacturers' instructions and BS 7593. It is only acceptable to not have undertaken this if the service engineers attendance visit was in between annual services to attend a non-water facing component.

* All installations in England and Wales must be notified to Local Authority Building Control (LABC) either directly or through a Competent Persons Scheme. A Building Regulations Compliance Certificate will then be issued to the customer.

benchmark COLLECTIVE MARK
THE MARK OF QUALITY FOR THE INSTALLATION, COMMISSIONING AND SERVICING OF DOMESTIC HEATING AND HOT WATER SYSTEMS

© Heating and Hotwater Industry Council (HHIC)

SERVICE & INTERIM BOILER WORK RECORD

It is recommended that your boiler and heating system are regularly serviced and maintained, in line with manufacturers' instructions, and that the appropriate service / interim work record is completed.

Service provider

When completing a service record (as below), please ensure you have carried out the service as described in the manufacturers' instructions. Always use the manufacturers' specified spare parts.

SERVICE/INTERIM WORK ON BOILER delete as appropriate			Date:	
Engineer name:		Company name:		
Telephone Nº:		Gas Safe registration Nº:		
Max rate	CO ppm	CO_2 %	CO/CO_2	
Min rate	CO ppm	CO_2 %	CO/CO_2	
Where possible, has a flue integrity check been undertaken in accordance with manufacturers' instructions, and readings are correct?"			yes	
Gas rate:	m^3/h	OR	ft^3/h	
Were parts fitted? delete as appropriate		Yes	No	
Parts fitted:				
System inhibitor concentration has been checked and appropriate action taken, in accordance with BS 7593 and boiler manufacturers' instructions. *			yes	n/a
Comments:				
Signature:				

*A System inhibitor efficacy test is required on every annual service in accordance with the manufacturers' instructions and BS 7593. It is only acceptable to not have undertaken this if the service engineers attendance visit was in between annual services to attend a non-water facing component.

SERVICE/INTERIM WORK ON BOILER delete as appropriate			Date:	
Engineer name:		Company name:		
Telephone Nº:		Gas Safe registration Nº:		
Max rate	CO ppm	CO_2 %	CO/CO_2	
Min rate	CO ppm	CO_2 %	CO/CO_2	
Where possible, has a flue integrity check been undertaken in accordance with manufacturers' instructions, and readings are correct?"			yes	
Gas rate:	m^3/h	OR	ft^3/h	
Were parts fitted? delete as appropriate		Yes	No	
Parts fitted:				
System inhibitor concentration has been checked and appropriate action taken, in accordance with BS 7593 and boiler manufacturers' instructions. *			yes	n/a
Comments:				
Signature:				

*A System inhibitor efficacy test is required on every annual service in accordance with the manufacturers' instructions and BS 7593. It is only acceptable to not have undertaken this if the service engineers attendance visit was in between annual services to attend a non-water facing component.

SERVICE/INTERIM WORK ON BOILER delete as appropriate			Date:	
Engineer name:		Company name:		
Telephone Nº:		Gas Safe registration Nº:		
Max rate	CO ppm	CO_2 %	CO/CO_2	
Min rate	CO ppm	CO_2 %	CO/CO_2	
Where possible, has a flue integrity check been undertaken in accordance with manufacturers' instructions, and readings are correct?"			yes	
Gas rate:	m^3/h	OR	ft^3/h	
Were parts fitted? delete as appropriate		Yes	No	
Parts fitted:				
System inhibitor concentration has been checked and appropriate action taken, in accordance with BS 7593 and boiler manufacturers' instructions. *			yes	n/a
Comments:				
Signature:				

*A System inhibitor efficacy test is required on every annual service in accordance with the manufacturers' instructions and BS 7593. It is only acceptable to not have undertaken this if the service engineers attendance visit was in between annual services to attend a non-water facing component.

SERVICE/INTERIM WORK ON BOILER delete as appropriate			Date:	
Engineer name:		Company name:		
Telephone Nº:		Gas Safe registration Nº:		
Max rate	CO ppm	CO_2 %	CO/CO_2	
Min rate	CO ppm	CO_2 %	CO/CO_2	
Where possible, has a flue integrity check been undertaken in accordance with manufacturers' instructions, and readings are correct?"			yes	
Gas rate:	m^3/h	OR	ft^3/h	
Were parts fitted? delete as appropriate		Yes	No	
Parts fitted:				
System inhibitor concentration has been checked and appropriate action taken, in accordance with BS 7593 and boiler manufacturers' instructions. *			yes	n/a
Comments:				
Signature:				

*A System inhibitor efficacy test is required on every annual service in accordance with the manufacturers' instructions and BS 7593. It is only acceptable to not have undertaken this if the service engineers attendance visit was in between annual services to attend a non-water facing component.

SERVICE/INTERIM WORK ON BOILER delete as appropriate			Date:	
Engineer name:		Company name:		
Telephone Nº:		Gas Safe registration Nº:		
Max rate	CO ppm	CO_2 %	CO/CO_2	
Min rate	CO ppm	CO_2 %	CO/CO_2	
Where possible, has a flue integrity check been undertaken in accordance with manufacturers' instructions, and readings are correct?"			yes	
Gas rate:	m^3/h	OR	ft^3/h	
Were parts fitted? delete as appropriate		Yes	No	
Parts fitted:				
System inhibitor concentration has been checked and appropriate action taken, in accordance with BS 7593 and boiler manufacturers' instructions. *			yes	n/a
Comments:				
Signature:				

*A System inhibitor efficacy test is required on every annual service in accordance with the manufacturers' instructions and BS 7593. It is only acceptable to not have undertaken this if the service engineers attendance visit was in between annual services to attend a non-water facing component.

* All installations in England and Wales must be notified to Local Authority Building Control (LABC) either directly or through a Competent Persons Scheme. A Building Regulations Compliance Certificate will then be issued to the customer.

© Heating and Hotwater Industry Council (HHIC)

benchmark COLLECTIVE MARK
THE MARK OF QUALITY FOR THE INSTALLATION, COMMISSIONING AND SERVICING OF DOMESTIC HEATING AND HOT WATER SYSTEMS

www.centralheating.co.uk

SERVICE & INTERIM BOILER WORK RECORD

It is recommended that your boiler and heating system are regularly serviced and maintained, in line with manufacturers' instructions, and that the appropriate service / interim work record is completed.

Service provider

When completing a service record (as below), please ensure you have carried out the service as described in the manufacturers' instructions. Always use the manufacturers specified spare parts.

SERVICE/INTERIM WORK ON BOILER delete as appropriate			Date:	
Engineer name:		Company name:		
Telephone Nº:		Gas Safe registration Nº:		
Max rate	CO ppm	CO_2 %	CO/CO_2	
Min rate	CO ppm	CO_2 %	CO/CO_2	
Where possible, has a flue integrity check been undertaken in accordance with manufacturers' instructions, and readings are correct?"			yes	
Gas rate:	m^3/h	OR	ft^3/h	
Were parts fitted? delete as appropriate		Yes	No	
Parts fitted:				
System inhibitor concentration has been checked and appropriate action taken, in accordance with BS 7593 and boiler manufacturers' instructions. *			yes	n/a
Comments:				
Signature:				

*A System inhibitor efficacy test is required on every annual service in accordance with the manufacturers' instructions and BS 7593. It is only acceptable to not have undertaken this if the service engineers attendance visit was in between annual services to attend a non-water facing component.

SERVICE/INTERIM WORK ON BOILER delete as appropriate			Date:	
Engineer name:		Company name:		
Telephone Nº:		Gas Safe registration Nº:		
Max rate	CO ppm	CO_2 %	CO/CO_2	
Min rate	CO ppm	CO_2 %	CO/CO_2	
Where possible, has a flue integrity check been undertaken in accordance with manufacturers' instructions, and readings are correct?"			yes	
Gas rate:	m^3/h	OR	ft^3/h	
Were parts fitted? delete as appropriate		Yes	No	
Parts fitted:				
System inhibitor concentration has been checked and appropriate action taken, in accordance with BS 7593 and boiler manufacturers' instructions. *			yes	n/a
Comments:				
Signature:				

*A System inhibitor efficacy test is required on every annual service in accordance with the manufacturers' instructions and BS 7593. It is only acceptable to not have undertaken this if the service engineers attendance visit was in between annual services to attend a non-water facing component.

SERVICE/INTERIM WORK ON BOILER delete as appropriate			Date:	
Engineer name:		Company name:		
Telephone Nº:		Gas Safe registration Nº:		
Max rate	CO ppm	CO_2 %	CO/CO_2	
Min rate	CO ppm	CO_2 %	CO/CO_2	
Where possible, has a flue integrity check been undertaken in accordance with manufacturers' instructions, and readings are correct?"			yes	
Gas rate:	m^3/h	OR	ft^3/h	
Were parts fitted? delete as appropriate		Yes	No	
Parts fitted:				
System inhibitor concentration has been checked and appropriate action taken, in accordance with BS 7593 and boiler manufacturers' instructions. *			yes	n/a
Comments:				
Signature:				

*A System inhibitor efficacy test is required on every annual service in accordance with the manufacturers' instructions and BS 7593. It is only acceptable to not have undertaken this if the service engineers attendance visit was in between annual services to attend a non-water facing component.

SERVICE/INTERIM WORK ON BOILER delete as appropriate			Date:	
Engineer name:		Company name:		
Telephone Nº:		Gas Safe registration Nº:		
Max rate	CO ppm	CO_2 %	CO/CO_2	
Min rate	CO ppm	CO_2 %	CO/CO_2	
Where possible, has a flue integrity check been undertaken in accordance with manufacturers' instructions, and readings are correct?"			yes	
Gas rate:	m^3/h	OR	ft^3/h	
Were parts fitted? delete as appropriate		Yes	No	
Parts fitted:				
System inhibitor concentration has been checked and appropriate action taken, in accordance with BS 7593 and boiler manufacturers' instructions. *			yes	n/a
Comments:				
Signature:				

*A System inhibitor efficacy test is required on every annual service in accordance with the manufacturers' instructions and BS 7593. It is only acceptable to not have undertaken this if the service engineers attendance visit was in between annual services to attend a non-water facing component.

SERVICE/INTERIM WORK ON BOILER delete as appropriate			Date:	
Engineer name:		Company name:		
Telephone Nº:		Gas Safe registration Nº:		
Max rate	CO ppm	CO_2 %	CO/CO_2	
Min rate	CO ppm	CO_2 %	CO/CO_2	
Where possible, has a flue integrity check been undertaken in accordance with manufacturers' instructions, and readings are correct?"			yes	
Gas rate:	m^3/h	OR	ft^3/h	
Were parts fitted? delete as appropriate		Yes	No	
Parts fitted:				
System inhibitor concentration has been checked and appropriate action taken, in accordance with BS 7593 and boiler manufacturers' instructions. *			yes	n/a
Comments:				
Signature:				

*A System inhibitor efficacy test is required on every annual service in accordance with the manufacturers' instructions and BS 7593. It is only acceptable to not have undertaken this if the service engineers attendance visit was in between annual services to attend a non-water facing component.

* All installations in England and Wales must be notified to Local Authority Building Control (LABC) either directly or through a Competent Persons Scheme. A Building Regulations Compliance Certificate will then be issued to the customer.

© Heating and Hotwater Industry Council (HHIC)

benchmark COLLECTIVE MARK
THE MARK OF QUALITY FOR THE INSTALLATION, COMMISSIONING AND SERVICING OF DOMESTIC HEATING AND HOT WATER SYSTEMS

www.centralheating.co.uk

9 IMPORTANT NOTES

1. BOILER LOCATION

Always ensure the following clearances are available around the casing of the boiler:-

Top: (horizontal flue) 235 mm, **Top:** (vertical flue) 150 mm

Bottom: 150 mm, **Each side:** 5 mm, **Front:** 450 mm

Do not store any other articles in a cupboard containing the boiler and never place any clothing or combustible material on or near the boiler or flue pipe.

2. FLUE TERMINAL

The terminal on the outside wall must not be allowed to be obstructed. If it is damaged, in any way, turn the boiler off and contact your Service Engineer.

Note: The Alpha E-Tec Plus boiler is a high efficiency condensing boiler and when operating vapour will be emitted from the terminal. This is safe and quite normal.

3. MAINS FAILURE

In the event of an electrical supply failure the boiler will not operate. When the supply is restored, the boiler will return to normal operation. Remember to reset any controls, if fitted, when the supply is restored.

If the mains water supply fails, there will be no hot water from the taps. The boiler will continue to provide central heating.

4. ADDITIONAL BATHROOM FITTINGS

Any equipment such as mixing valves, showers, bidets etc. must be designed to operate at mains water pressure. Contact your plumbing merchant or installer for advice when considering purchasing such items.

5. CLEANING

Use only a damp cloth and mild detergent to clean the boiler outer casing. Do not use abrasive cleaners.

6. SERVICING

To maintain efficient and safe operation of your boiler, routine annual servicing is essential.

For advice on servicing contact:- The Alpha Helpline: 0344 871 8764.

7. GAS LEAK

If you smell gas or are worried about gas safety, turn off the gas supply. Do not touch any electrical switches, do not smoke, extinguish all naked flames and open all doors and windows. Contact the National Gas Emergency Service immediately on 0800 111 999.

8. ELECTRICAL SUPPLY

The boiler requires a 230 V ~ 50 Hz supply, fused at 3 A.

To connect a plug:-

The colour of the wires in the mains lead of the boiler may not correspond with the coloured markings identifying the terminals in your plug. In this case proceed as follows:-

The wire coloured green and yellow must be connected to the terminal in the plug that is marked with the letter **E**, or by the earth symbol ⏚, or coloured green or green and yellow.

The blue wire must be connected to the terminal which is marked with either the letter **N** or coloured black.

The brown wire must be connected to the terminal which is marked with the letter **L** or coloured red.

THE APPLIANCE MUST BE EARTHED.

9. DO NOT TAMPER WITH THE APPLIANCE OR FLUE

At the end of its service life, the appliance must not be disposed of like normal household waste nor abandoned in the environment, but must be removed by a professionally authorised company as required by current legislation. Contact the manufacturer for disposal instructions.

10 OPTIONAL BOILER CONTROLS (if fitted)

There is a range of controls available from Alpha to operate your boiler. In addition to the items listed below the Alpha E-Tec Plus boilers are compatible with most controls available on the market. However to get the most comfort and efficiency from your boiler we recommend the Alpha Climatic controls with enhanced remote boiler functions and efficiency control.

Please refer to the instructions provided with the controls for further information on their setting and use.

Available Alpha controls:

Alpha Easy-Stat wireless programmable room thermostat ..... Part No. 7.2000050

24hr mechanical heating clock (boiler mounted) ..... Part No. 6.1000201

Alpha Climatic wired programmable boiler energy manager ..... Part No. 3.022144

Alpha Climatic wireless programmable boiler energy manager (boiler mounted receiver) ..... Part No. 3.022143

External weather compensation sensor ..... Part No. 3.022383

5 FROST PROTECTION

The boiler has a built in frost protection function to protect the boiler (only) from freezing. If water within the boiler falls below 4°C the boiler will fire in heating mode and raise the temperature of the heating water (in the boiler only) to 30°C.

For this function to be active the gas and electricity supplies to the boiler must be turned on and the boiler be in either 'Standby' or 'On' mode.

Further protection for the mains water supply and heating circuit must be provided separately.

If Alpha external controls are fitted, a frost protection setting is incorporated into the room thermostat activating the central heating when the temperature falls below 5°C.

6 CONDENSATE DRAINAGE

High efficiency (condensing) boilers remove more useful heat from the combustion gases, resulting in additional water vapour which is collected within the boiler (as condensate) and run to a suitable drainage point via the condensate drainage pipe.

Where possible the condensate drain should be connected internally to a waste pipe within the property to prevent the risk of freezing.

If the condensate drain pipe runs outside it should be fitted with increased diameter pipe and be suitably lagged to reduce the risk from freezing.

In situations where there are likely to be extremes of temperature or wind-chill the use of a proprietary trace-heating system for external condensate drainage pipework, incorporating an external frost thermostat, should be considered.

7 GAS SAFETY REGULATIONS

Current Gas Safety (Installation and Use) Regulations:-

It is the law that all gas appliances are installed and serviced by a competent person, i.e. Gas Safe registered personnel. Failure to install or service appliances correctly could lead to prosecution. It is in your interest and that of safety to ensure compliance with the law. The manufacturer's instructions must not be taken in any way as over-riding statutory obligations.

The Benchmark Checklist must be fully completed by the installer on installation of the boiler. The Benchmark Checklist is shown in back of the Installation and Servicing instructions. All Gas Safe registered installers carry a Gas Safe ID card and have a registration number. Both should be recorded in the Checklist. You can check your installer is Gas Safe registered by calling Gas Safe on 0800 408 5500.

8 BENCHMARK COMMISSIONING and SERVICING

It is a requirement that the boiler is installed and commissioned to the manufacturers instructions and the data fields on the commissioning checklist completed in full.

To instigate the boiler guarantee the boiler needs to be registered with the manufacturer within one month of the installation.

To maintain the boiler guarantee it is essential that the boiler is serviced annually by a Gas Safe registered engineer who has been trained on the boiler installed. The service details should be recorded on the Benchmark Service Interval Record and left with the householder.

3 HEATING AND HOT WATER TEMPERATURE

The temperature of the hot water to the taps can be adjusted by using the hot water temperature control buttons (items 4 and 5 in Fig. 1) to the required value shown on the display in °C.

When a tap is opened the display will indicate the temperature of water in the boiler heating the tap water and not the actual water temperature to the tap.

Attention: Water at a temperature greater than 50°C can cause serious burns. Always check the water temperature before use.

The temperature of the central heating water can be adjusted by using the heating temperature control buttons (items 6 and 7 in Fig. 1). When the heating is on the temperature of the water leaving the boiler to the radiators will be displayed.

If an external weather compensation probe is fitted, indicated by the symbol (item 12 in Fig. 1) in the display, it will automatically vary the temperature of the water in the radiators and on a mild day the radiators will not feel as hot as on a cold day, this is normal and not a fault with the boiler or heating circuit. The room temperature will still be maintained as set by the room thermostat.

When an external weather sensor is fitted, the central heating temperature control buttons (items 6 and 7 in Fig. 1) will no longer adjust the flow temperature in °C, instead the display will show a scale of 1 to 9. Each number corresponds to a line on the graph in Fig 2 i.e. line 6 will give a flow temperature of 60°C when the external temperature is 10°C.

Note: This is the temperature of the water supplied to the radiators and not the desired room temperature. The time and temperature will still be maintained according to the setting of the room thermostat.

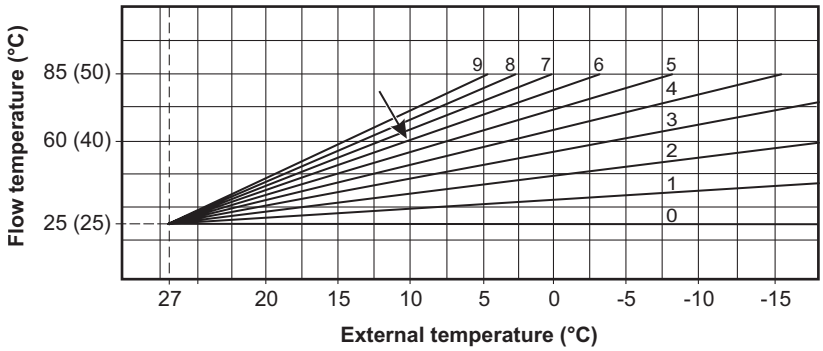

Setting 1 to 9 as selected using the central heating selector switch

Flow temperature in brackets ie. 25 to 50°C range when boiler is used with a low temperature system such as under floor heating

Fig. 2 - External weather compensation probe fitted

4 FILL AND PRESSURISE THE SYSTEM

The system pressure when cold should be 1 bar i.e. within the green section of the pressure gauge.

E-Tec Plus models have an integrated filling loop underneath the boiler combined with the isolation valves. It may be necessary to remove the cover under the boiler to expose the filling loop.

Check the loop is fully connected by the sliding brass section between the cold mains inlet and the left primary return tightening to seal. Carefully open the black tap on the right return connection, now slowly open the left black tap and the system will begin to fill.

Observe the reading on the pressure gauge and close the tap when the pointer is in the upper green section just above 1 bar.

It is normal for the pressure to rise above the green section when the heating is on as the system expands.

If the system is overfilled and the pressure is greater than the green section when cold the pressure can be reduced by carefully venting some water from a radiator.

The filling loop can be seen in the Installation instructions Fig. 5.4 in this manual.

Please read these instructions carefully before operating your boiler.

1 INTRODUCTION

The Alpha E-Tec Plus range of high efficiency condensing boilers incorporate the latest technology in boiler design. With improved burner efficiency and reduced electrical consumption together with high quality and reliability.

The boiler output will automatically adjust according to the requirements of the system.

The E-Tec Plus range are designed to work with most central heating controls however we recommend the Alpha Comfort or Easy-Stat standard controls or the enhanced Alpha Climatic boiler energy manager further improving the system efficiency by varying the system temperature depending on the room temperature and heat losses.

In addition all E-Tec Plus models feature optional connections for an outside sensor to enable the boilers built in weather compensation feature.

The boilers will provide central heating when required during the on times as set according to the controls fitted. Hot water will always take priority over the central heating whenever a hot tap is opened.

Refer to Section 2 of the Installation and Servicing document for the meaning of the information symbols.

2 OPERATING THE BOILER

The boiler can be used by children at least 8 years old as well as by persons with reduced physical, sensory or mental capabilities, lack of experience or required knowledge providing that they are under surveillance, or after they have been instructed relating to the safe use and have understood the potential dangers. Children must not play with the appliance. Cleaning and maintenance destined to be performed by the user cannot be carried out by unsupervised children.

The boiler controls are located on the control panel.

Make sure the heating system is filled and the needle on the pressure gauge (item 8 in Fig. 1) is in the green band when cold. If incorrect refer to Section 4.

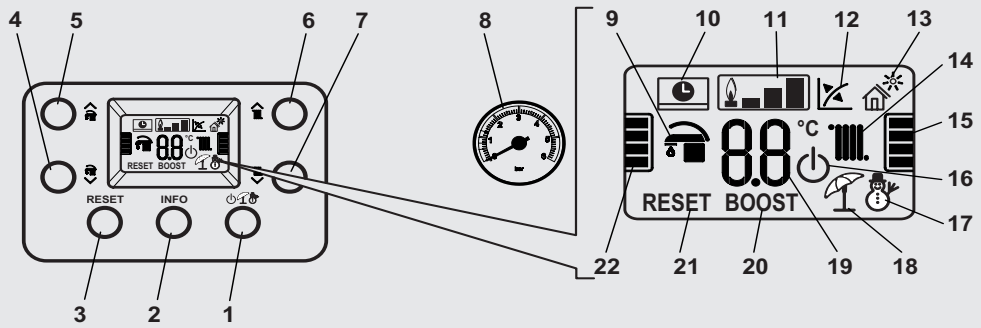

1 - Off/Stand-by/Summer/Winter button
2 - Information button
3 - Reset Button
4 - Reduce DHW set temperature
5 - Increase DHW set temperature
6 - Increase heating system set temperature
7 - Reduce heating system set temperature
8 - Heating system pressure gauge
9 - Domestic hot water active
10 - Remote Climatic controller fitted
11 - Boiler fired and power level
12 - External weather probe fitted
13 - Active solar supply (pre-heated inlet)
14 - Central heating active
15 - Central heating temperature indicator
16 - Boiler in Stand-by mode
17 - Winter mode – heating and hot water
18 - Summer mode – DHW only
19 - Temperature/info/code - display
20 - Boost function active
21 - Boiler locked - reset required
22 - DHW temperature indicator

Fig. 1

If the boiler is locked out and an error code is shown on the display, the RESET button can be pressed to try and clear the fault. If the fault still occurs after pressing RESET, then contact an approved engineer or Alpha service support department.

Switch the boiler on at the mains supply socket switch. The boiler will be in either 'Standby' or 'On' mode.

By pressing the Mode button (item 1 in Fig. 1) the Standby or On mode can be selected, or press and hold the Mode button for eight seconds to turn the boiler off.

Standby - In this mode the boiler will not provide hot water or central heating, but frost protection and pump circulation features are still active.

Off - In this mode there is electrical power to the boiler but the boiler will not function in any condition.

On - In this mode the boiler can be switched between 'Summer' or 'Winter' settings by pressing the Mode button (item 1 in Fig. 1).

Summer setting - The boiler will only provide hot water when a tap is turned on and the central heating will not activate even if requested by external controls (frost protection and pump cycle are still active).

Winter setting - The boiler will operate in both heating and hot water. The heating will activate depending on the time and temperature from any heating controls fitted. Hot water will always take priority over heating when a hot outlet tap is opened.

User Instructions

E-Tec Plus 28, 33 and 38

Wall Mounted, Fan Assisted, Room Sealed, Gas Fired, High Efficiency Condensing Combination Boiler

For Technical help or for Service call ...
ALPHA HELPLINE Tel 0344 871 8764
website: www.alpha-innovation.co.uk

Alpha
HEATING INNOVATION

Nepicar House, London Road,
Wrotham Heath, Sevenoaks,
Kent TN15 7RS

Alpha E-Tec Plus 28	G.C. No. 47 532 77
Alpha E-Tec Plus 33	G.C. No. 47 532 78
Alpha E-Tec Plus 38	G.C. No. 47 532 79

benchmark
COLLECTIVE MARK
THE MARK OF QUALITY FOR THE INSTALLATION, COMMISSIONING AND SERVICING OF DOMESTIC HEATING AND HOT WATER SYSTEMS

Leave these instructions with the User